DECK MACHINERY for TUG BOATS & SUPPLY VESSELS

FUKUSHIMA LTD.

I. HYDRAULICALLY-DRIVEN WINCH

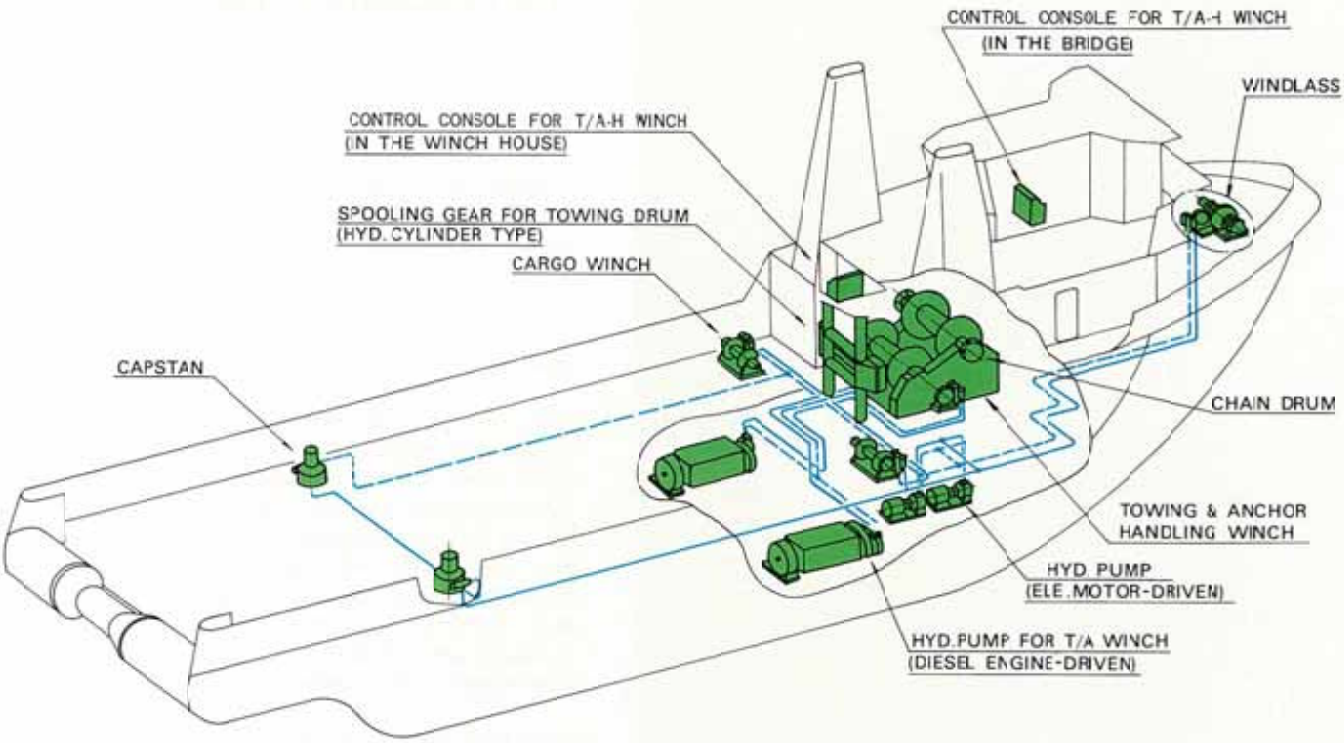

1. Hydraulic System

The hydraulic system manufactured by FUKUSHIMA LTD. is based on a technical cooperation agreement in low pressure hydraulic deck machinery, contracted with A/S HYDRAULIK BRATTVAAG of Norway. The system, incorporating a 30Kg/cm² or 40Kg/cm² low pressure hydraulic vane pump, motor and special control valve, displays superior characteristics in every way. The following features are particularly noteworthy.

1) High Working Efficiency

The hydraulic motor is a 3-chamber type and therefore, when under load, the winding speed can be selected automatically in 3 steps.
At light load, a winding speed of up to 3 times that at the rated loading can be obtained.
In the same way, a pay-out speed of up to 3 times the rated winding speed can be obtained.

Theoretical Characteristics for One-Motor Type Winch

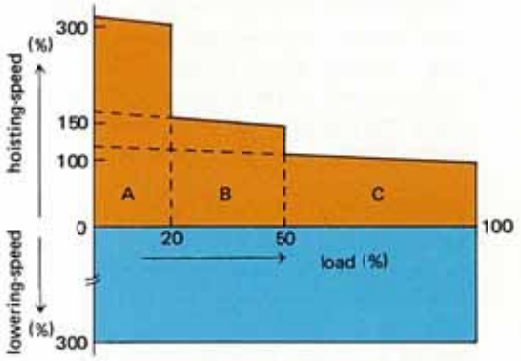

When 2 hydraulic motors are used, at light load, a maximum winding speed of up to 6 times that at the rated loading can be easily gained.
The possible pay-out speed, too, is up to 6 times the rated winding speed.

Theoretical Characteristics for Two-Motor Type Winch

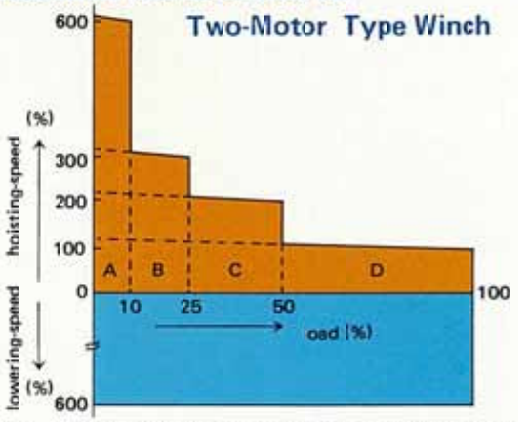

These characteristics are selected to best suit the conditions of winch use.

2) Safety of Operation

The hydraulic motor speed is controlled steplessly and, whatever the operating angle of the control handle, a very sensitive control can be obtained within the speed range of each step.
Also, with the use of a special valve adapted to the conditions of each winch, a safer and more reliable operation becomes possible.
For anchor-handling and towing winches, the following kinds of valves are employed, according to conditions of operation:

(1) Lower Limit Valve (F92B)

When lowering or paying out the load, this valve prevents the hydraulic motor from accelerating and turning over too fast, also preventing the resultant cavitation and thereby maintaining a proper rotation. Consequently, by using this valve, the winch can be operated to its full capacity, safely and efficiently.

(2) Mooring Valves (F34, F55)

At times when the hydraulic motor is under load, these valves absorb any shock pressure created inside the hydraulic motor by fluctuations in the load, protecting the wire rope and related machinery.

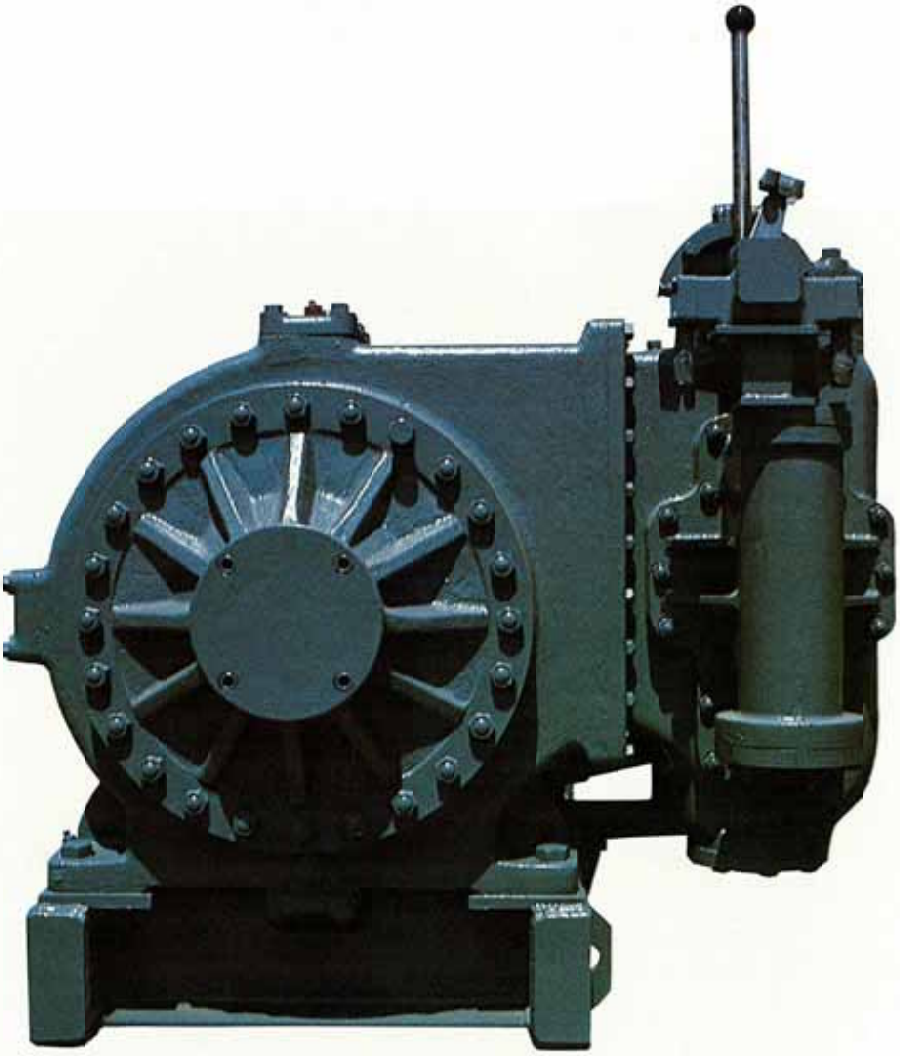

3) Simple Construction, Easy Inspection and Maintenance

FUKUSHIMA's hydraulic system is a low pressure system and each component part is of lasting durability and strength. The hydraulic pump and motor are a simple vane type, of very sturdy construction. In addition, all control valves and safety devices are fitted inside the hydraulic motor and pump, making for a simple hydraulic system which is easy to handle, check and maintain.

4) Low Noise

The employment of a low pressure hydraulic system which operates at low speed means the frequency remains low and therefore, that there is no unpleasant quality noise.

5) Simple Construction of Winch

Due to the low speed – high torque type of hydraulic motor used in the FUKUSHIMA hydraulic system, the power transmission equipment of the winch is extremely simple.

6) Common Use and Rationalization of Power Unit

The FUKUSHIMA series of hydraulic pumps covers an extensive range of machinery, from small to large capacity. Their comprehensive design gives due consideration to conditions for simultaneous use of winches on board and to load ratings etc., and as a result of selecting and combining the most suitable machinery types, the pump unit can be put into common use with more than the one winch, thus making for an impressive operations rationalization.

In addition, based on the power table for the whole ship, the pump unit's motive power can be used to drive other equipment as well. This is very important for operations ships, tug boats and the like.

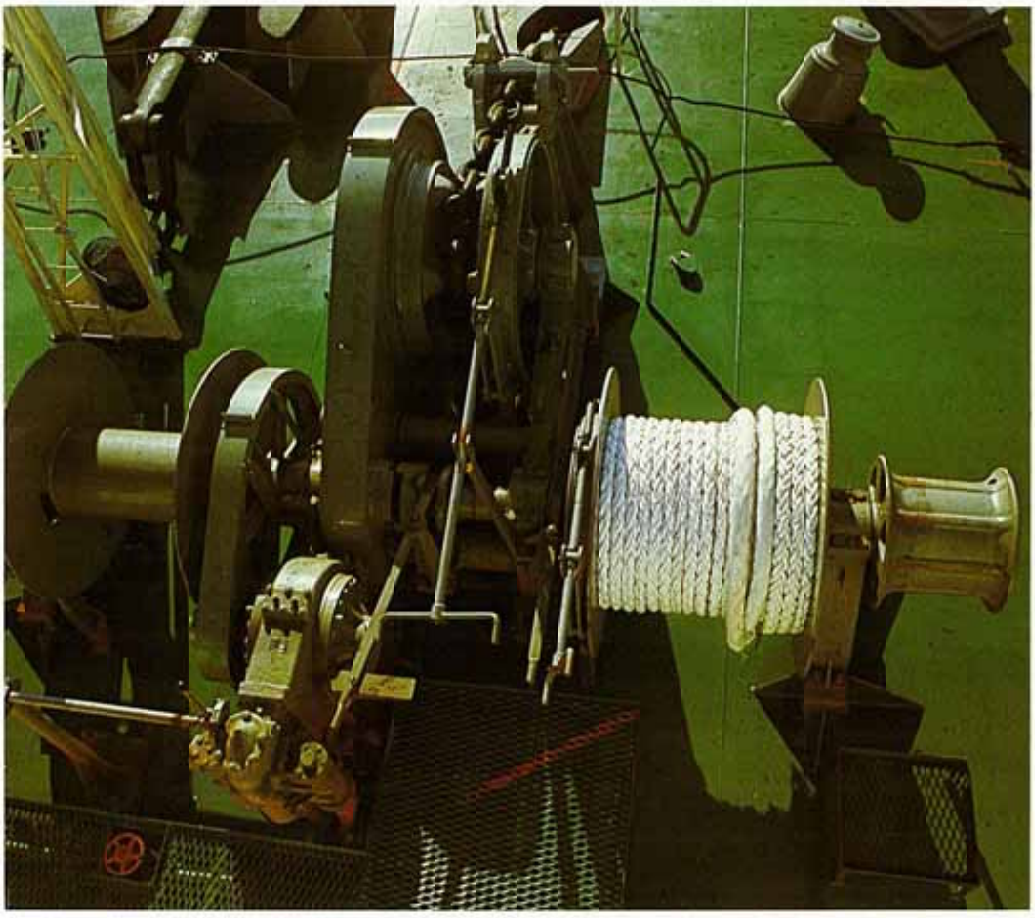

2. Hydraulic Towing/Anchor-Handling Winch and Towing Winch

This series is the outcome of FUKUSHIMA LTD.'s long years of experience in hydraulic towing winches, diesel towing/anchor-handling winches and in every kind of deck machinery, supplemented here by the opinions of the widely experienced Norwegian company, A/S HYDRAULIK BRATTVAAG.

The hydraulic system used is the FUKUSHIMA low pressure system, time-proven and with an excellent record of performance, designed for optimal response to winch working conditions.

The towing/anchor-handling winch comes in two capacity types, the practical 2-hydraulic motor type and the high speed 4-hydraulic motor type.

For the towing winch, please select the rated speed from the "Wincing Speed Table".

The winch body has been designed in consideration of the type of construction, checking and maintenance most suited to the conditions of use; it is compact and lightweight. Each towing winch is equipped with the FUKUSHIMA standard diamond-screw type wire shifter, in accordance with capacity. In the case of the towing/anchor-handling winch, standard specifications do not include a wire shifter. At FUKUSHIMA LTD., however, a diamond-screw type and a hydraulic-cylinder type are used as the standard wire shifter, with a wire shift capacity up to 60 tons maximum.

The winch control device is designed for ease of operation and with due consideration given to the safety of operators and crew. The control system used is the Hydraulic Servo & Pneumatic Remote Control System.

Of particular note is the fact that the towing/anchor-handling winch is built in conformity with the "Regulations for the building and operation of tug-boats and supply ships" of the Norwegian Maritime Directory.

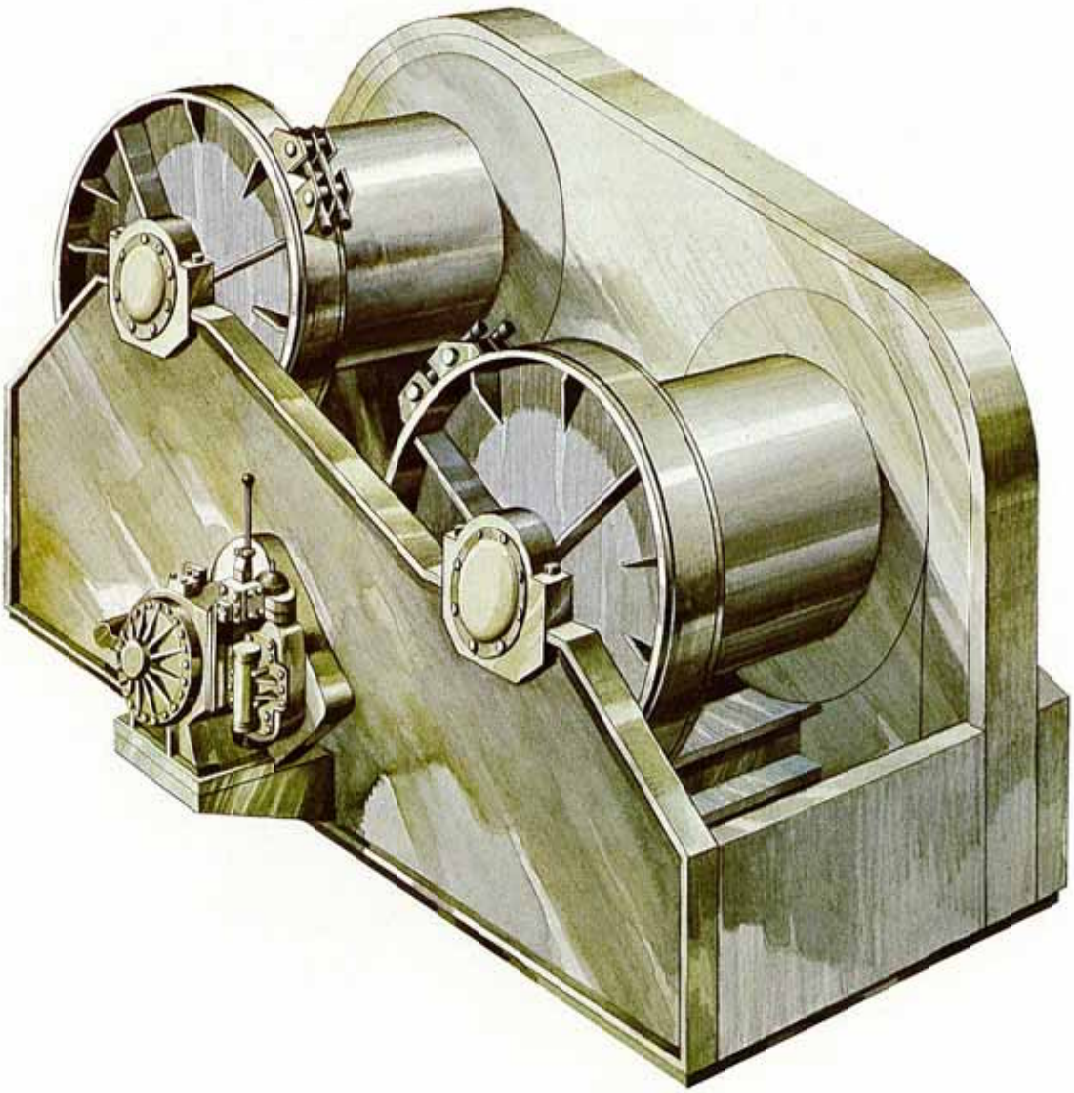

1 HYDRAULIC TOWING/ANCHOR-HANDLING WINCH

"DDW" TYPE

PIPE DIAGRAM

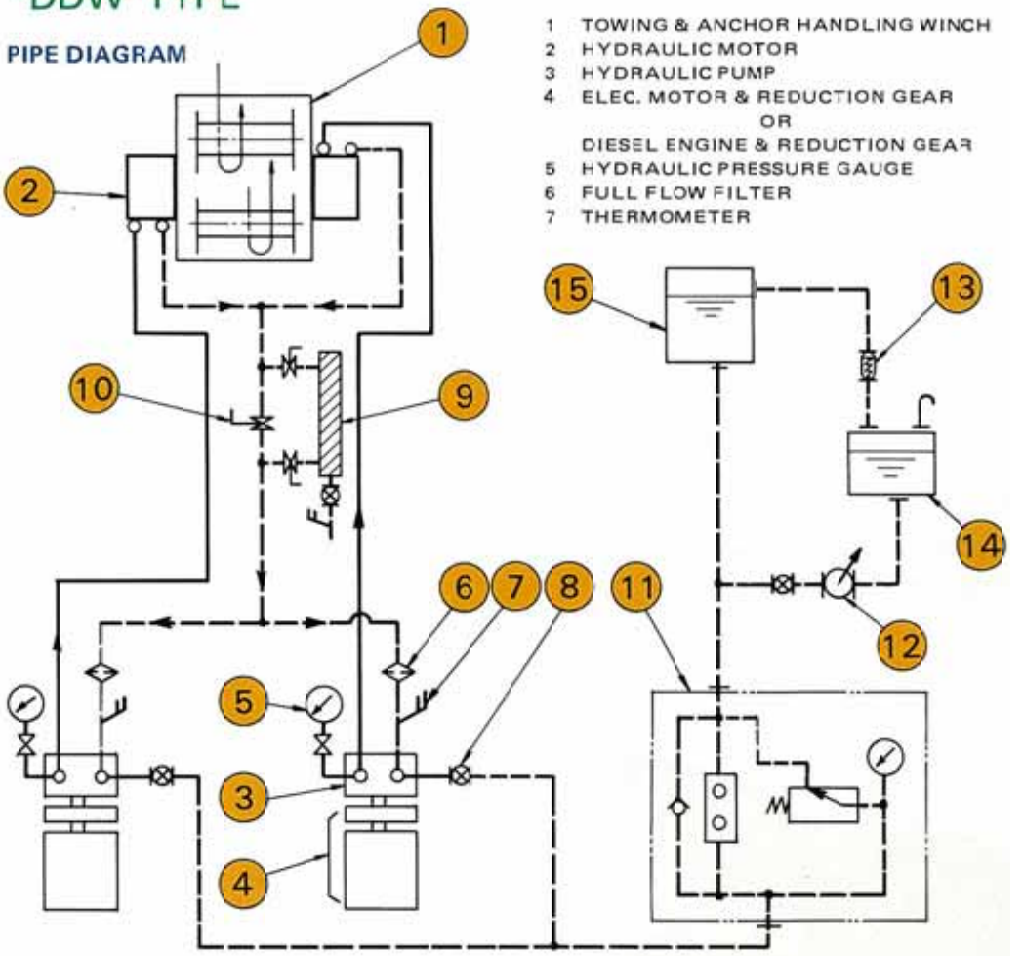

1 TOWING & ANCHOR HANDLING WINCH
2 HYDRAULIC MOTOR
3 HYDRAULIC PUMP
4 ELEC. MOTOR & REDUCTION GEAR
OR
DIESEL ENGINE & REDUCTION GEAR
5 HYDRAULIC PRESSURE GAUGE
6 FULL FLOW FILTER
7 THERMOMETER
8 STOP VALVE
9 OIL COOLER
10 BUTTERFLY VALVE
11 BOOSTER PUMP UNIT
12 FILLING PUMP
13 SIGHT GLASS
14 FILLING TANK
15 EXPANSION TANK

GENERAL ARRANGEMENT

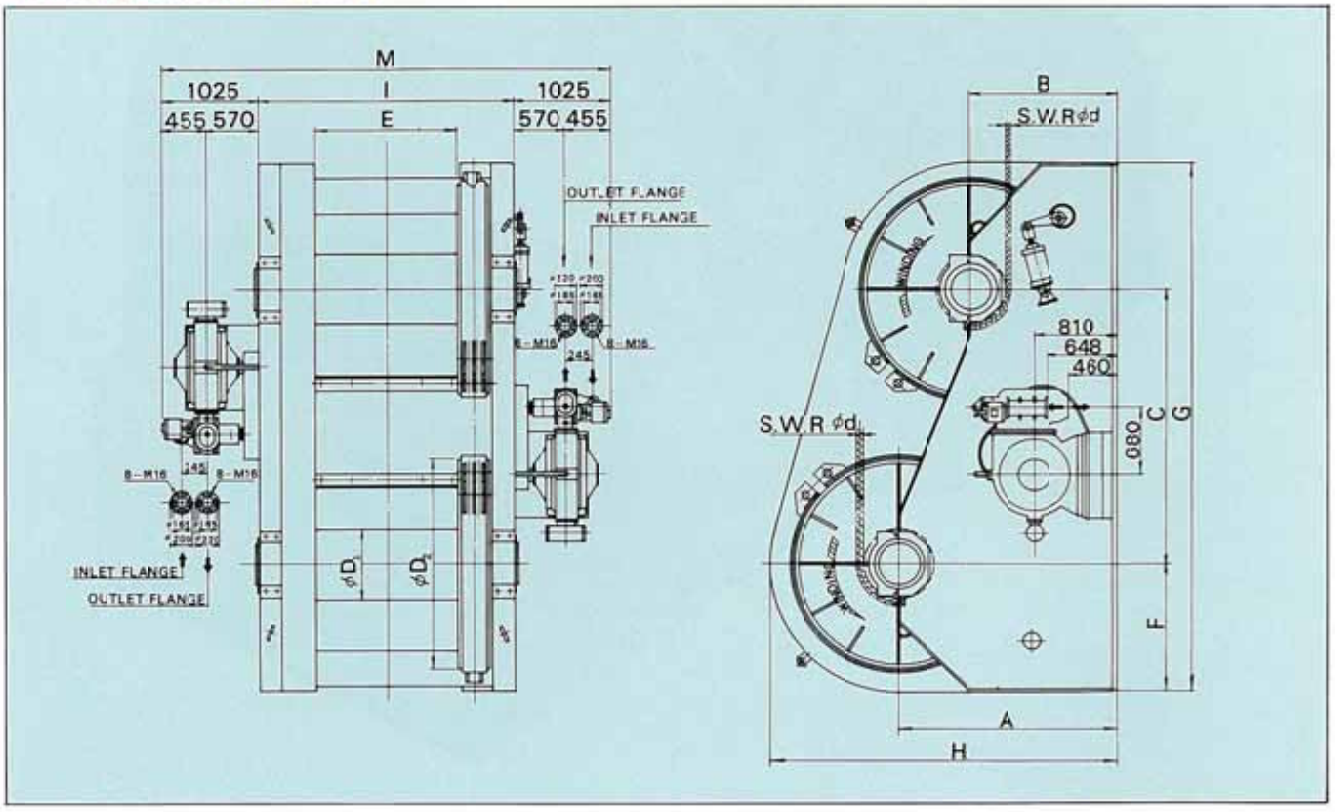

DETAILED SPECIFICATION LIST

Model	Pull-capacity			Max. lowering speed at full load (m/min)	Brake capa. (ton)	Stowing-capa. (steel wire rope) (mm)x(m)	Type of hyd. motor & control valve	Type of hyd. pump	Required els. motor output (kW)	Weight (ton)
	Full-load (ton)x(m/min)	Half-load (ton)x(m/min)	Light-load (ton)x(m/min)							
DDW-150H-2M	75x11	37.5x16.5	15x33	36.5	150	φ45x1000 with 11 layers	2M-Type: 2-M4185/E12	2M-Type: 2-G16(40<)	125x2	27.0
DDW-200H-2M	100x8.4	50 x12.6	20x25.2	28	200	φ50x1000 with 11 layers			125x2	32.0
DDW-350H-2M	130x6.5	65 x9.8	26x19.5	22	225	φ52x1000 with 10 layers			125x2	35.0
DDW-400H-2M	150x5.6	75 x8.4	30x16.8	18.5	250	φ60x1000 with 10 layers			125x2	38.0
DDW-500H-2M	200x4.2	100 x6.3	40x12.6	13.9	300	φ64x1200 with 10 layers			125x2	55.0
DDW-350H-4M	130x10	65 x15	26x30	33	225	φ52x1000 with 10 layers	4M-Type: 4-M4185/E12	4M-Type: 4-G16(40<)	98x4	39.0
DDW-400H-4M	150x8	75 x12	30x24	26.5	250	φ60x1000 with 10 layers			90x4	42.0
DDW-500H-4M	200x6	100 x9	40x18	20	300	φ64x1200 with 10 layers			90x4	60.0

Note: Rated-capacity is calculated at the first rope layer around the drum.

DIMENSION LIST

Model	A	B	C	D_1	D_2	E	F	G	H_1	I	M
DDW-150H-2M	1850	1200	2250	700	1850	1260	1050	4350	2890	2250	4280
DDW-200H-2M	2000	1250	2500	700	2000	1260	1100	4700	3100	2350	4400
DDW-350H-2M (DDW-350H-4M)	2150	1450	2700	800	2150	1400	1255	5210	3405	2520	4570
DDW-400H-2M (DDW-400H-4M)	2200	1450	2750	900	2200	1400	1360	5470	3460	2600	4650
DDW-500H-2M (DDW-500H-4M)	2500	1600	3000	1000	2500	1600	1450	5900	3870	2950	5000

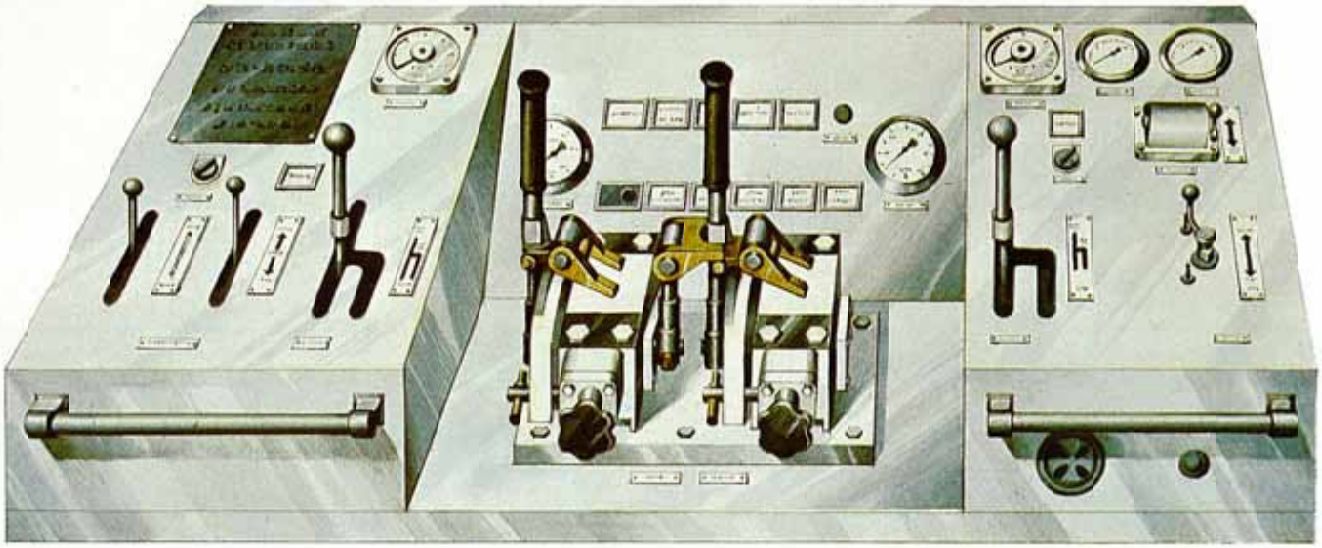

2 HYDRAULIC TOWING WINCH

"TS-10,15,20,25,30H" TYPE

PIPE DIAGRAM

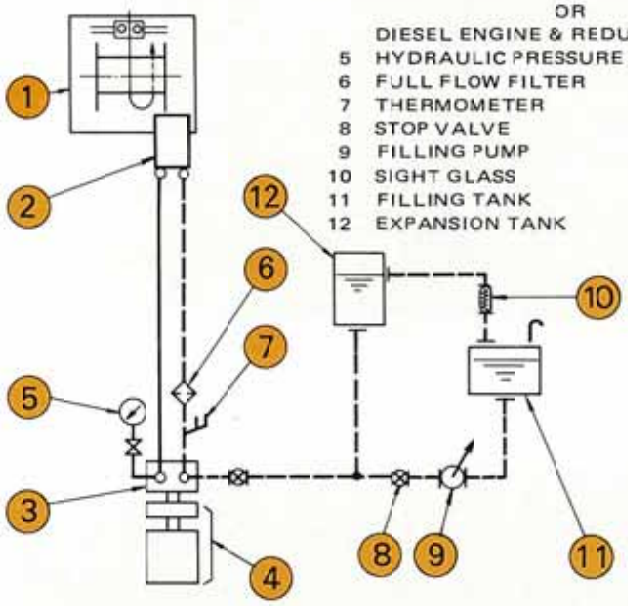

1 TOWING WINCH
2 HYDRAULIC MOTOR
3 HYDRAULIC PUMP
4 ELEC. MOTOR & REDUCTION GEAR
OR
DIESEL ENGINE & REDUCTION GEAR
5 HYDRAULIC PRESSURE GAUGE
6 FULL FLOW FILTER
7 THERMOMETER
8 STOP VALVE
9 FILLING PUMP
10 SIGHT GLASS
11 FILLING TANK
12 EXPANSION TANK

DIMENSION LIST

Model	TS-10H	TS-15H	TS-20H	TS-25H	TS-30H
A	950	1000	1050	1150	1250
D_1	600	650	650	750	750
D_2	1320	1410	1545	1700	1750
E	955	955	1210	1210	1300
F	800	930	1050	1120	1350
G	2200	2400	2600	2700	3000
H	1750	1850	1950	2100	2300
I	1520	1720	2100	2205	2410
K	1320	1965	2185	2310	2565
L	1010	1060	1250	1300	1405
M	2330	3025	3435	3610	3970
O	350	400	400	450	500
P	400	450	450	500	550

GENERAL ARRANGEMENT

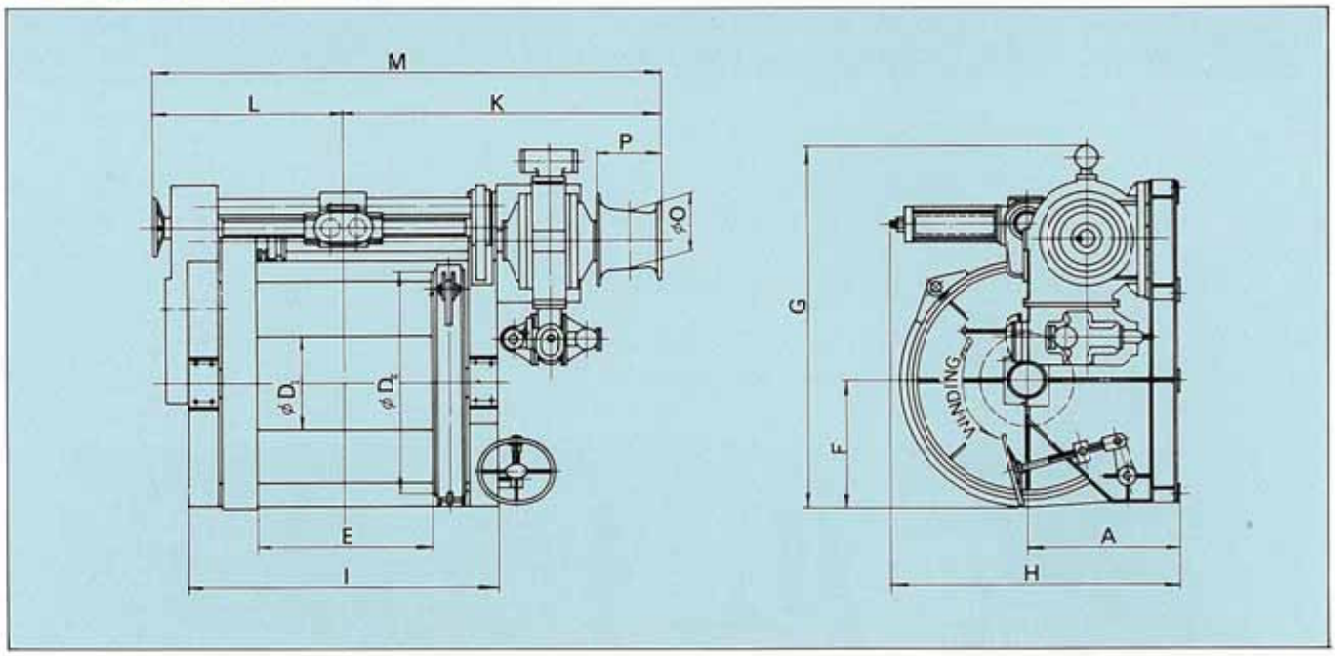

DETAILED SPECIFICATION LIST

Model	Pull-capacity			Max. Pay-out speed at full load (m/min)	Brake capa. (ton)	Stowing-capa. (steel wire rope) (mm)x(m)	Type of hyd. motor & control valve	Type of hyd. pump	Required ele. motor output (kw)	Weight (ton)
	Full-load (ton)x(m/min)	Half-load (ton)x(m/min)	Light-load (ton)x(m/min)							
TS-10H	10x15	5x22.5	2x45	50	25	φ37.5x550 with 8 layers	FMA5M/E12	FG170	45	6.8
TS-15H	15x15	7.5x22.5	3x45	50	38	φ40x650 with 8 layers	MA7M/E12	FG16	65	8.0
TS-20H	20x15	10x22.5	4x45	50	50	φ42.5x750 with 9 layers	MA8M/E12	FG16	83	9.5
TS-25H	25x15	12.5x22.5	5x45	50	63	φ45x850 with 9 layers	MA10/E12	FG16	100	10.4
TS-30H	30x12	15x18	6x36	40	75	φ47.5x850 with 9 layers	MA10/E12	FG16	100	12.4

"TS-40,50,60H" TYPE

PIPE DIAGRAM

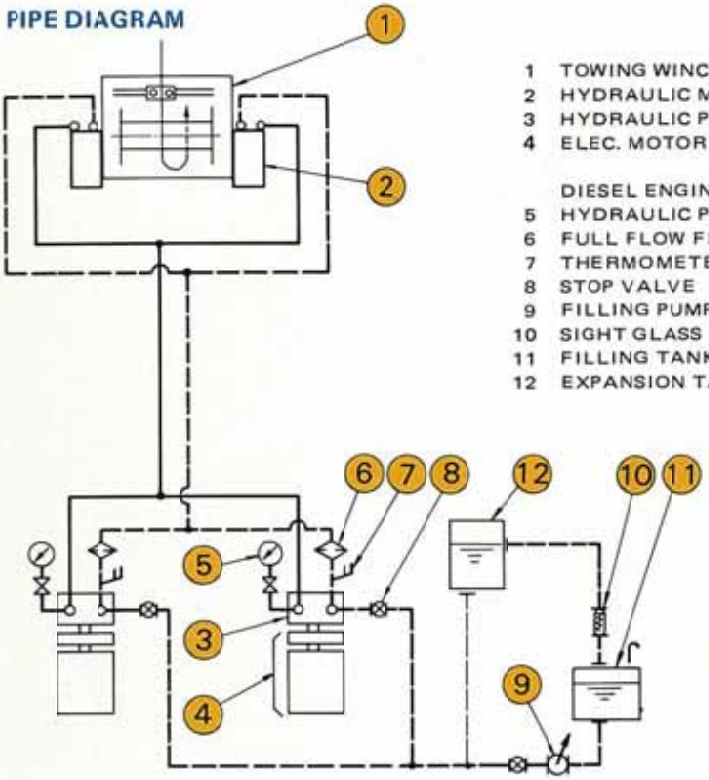

1 TOWING WINCH
2 HYDRAULIC MOTOR
3 HYDRAULIC PUMP
4 ELEC. MOTOR & REDUCTION GEAR
OR
DIESEL ENGINE & REDUCTION GEAR
5 HYDRAULIC PRESSURE GAUGE
6 FULL FLOW FILTER
7 THERMOMETER
8 STOP VALVE
9 FILLING PUMP
10 SIGHT GLASS
11 FILLING TANK
12 EXPANSION TANK

DIMENSION LIST

Model	TS-40H	TS-50H	TS-60H
A	1350	1400	1500
D_1	800	850	900
D_2	1900	1970	2080
E	1300	1385	1475
e	0	0	40
F	1300	1430	1490
G	2900	3080	3280
H	2450	2530	2680
I	2435	2730	2980
K	2550	2690	2815
L	2213	2360	2485
M	4763	5050	5300
O	400		
P	450		

GENERAL ARRANGEMENT

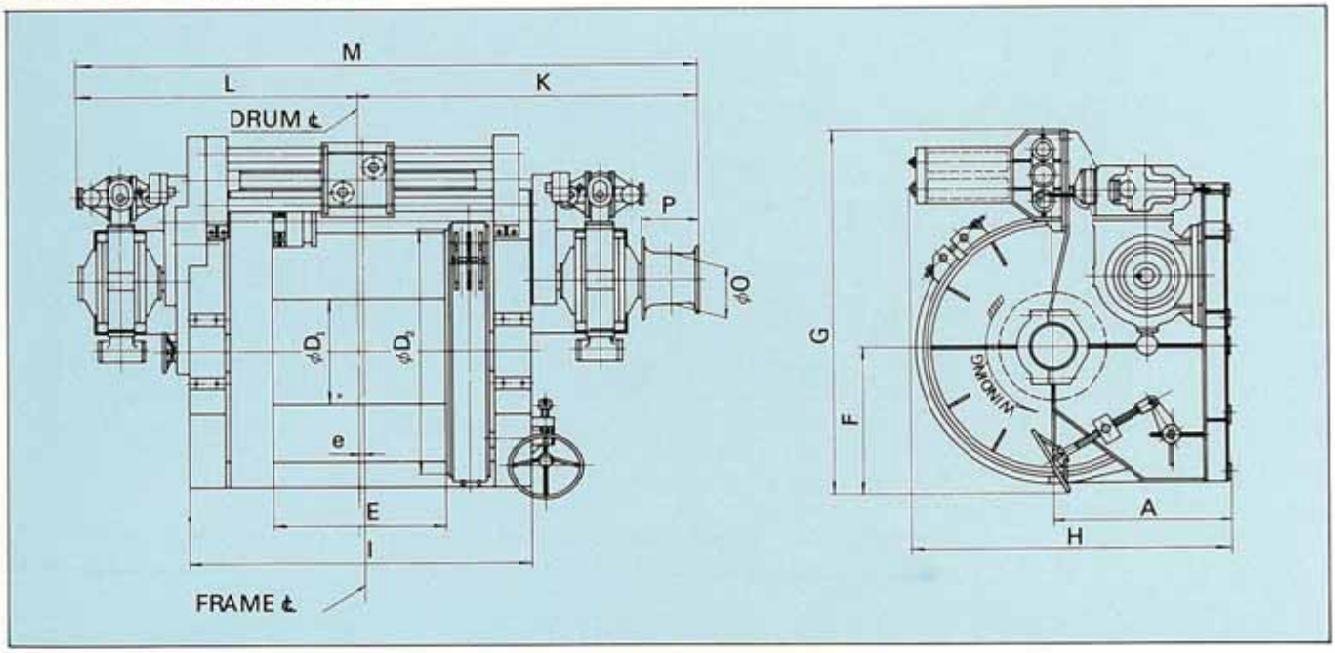

DETAILED SPECIFICATION LIST

Model	Pull-capacity			Max. Pay-out speed at full load (m/min)	Brake capa. (ton)	Stowing-capa. (steel wire rope) (mm)x(m)	Type of hyd. motor & control valve	Type of hyd. pump	Required ele. motor output (kw)	Weight (ton)
	Full-load (ton)x(m/min)	Half-load (ton)x(m/min)	Light-load (ton)x(m/min)							
TS-40H	40x10	20x15	8x30	33	100	ϕ50x900 with 9 layers	2-MA8M/E12	2-FG16	63x2	16.5
TS-50H	50x8.5	25x12.8	10x26	28	125	ϕ53x950 with 9 layers			65x2	18.7
TS-60H	60x7.5	30x11.3	12x22.5	25	150	ϕ56x1000 with 9 layers			69x2	20.3

"TDS-60,80,100H" TYPE

PIPE DIAGRAM

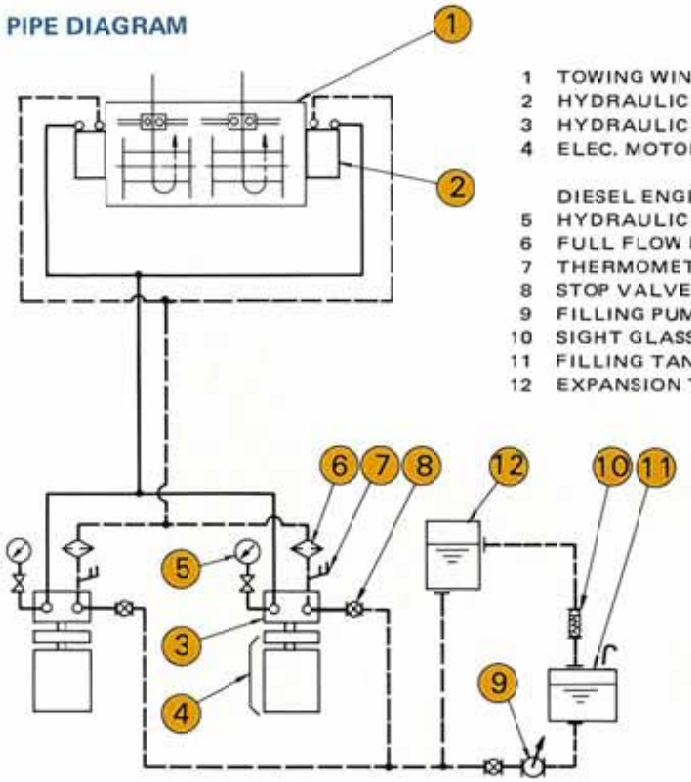

1 TOWING WINCH
2 HYDRAULIC MOTOR
3 HYDRAULIC PUMP
4 ELEC. MOTOR & REDUCTION GEAR
OR
DIESEL ENGINE & REDUCTION GEAR
5 HYDRAULIC PRESSURE GAUGE
6 FULL FLOW FILTER
7 THERMOMETER
8 STOP VALVE
9 FILLING PUMP
10 SIGHT GLASS
11 FILLING TANK
12 EXPANSION TANK

DIMENSION LIST

Model	TDS-60H	TDS-80H	TDS-100H
A	1400	1450	1600
C	2420	2600	2910
D_1	800	850	900
D_2	2080	2150	2370
E	1300	1300	1505
F	1250	1250	1400
G	3150	3265	3650
H	2650	2730	2985
I	4900	5190	5825
M	7620	7910	8545
N	1360		
O	400		
P	450		

GENERAL ARRANGEMENT

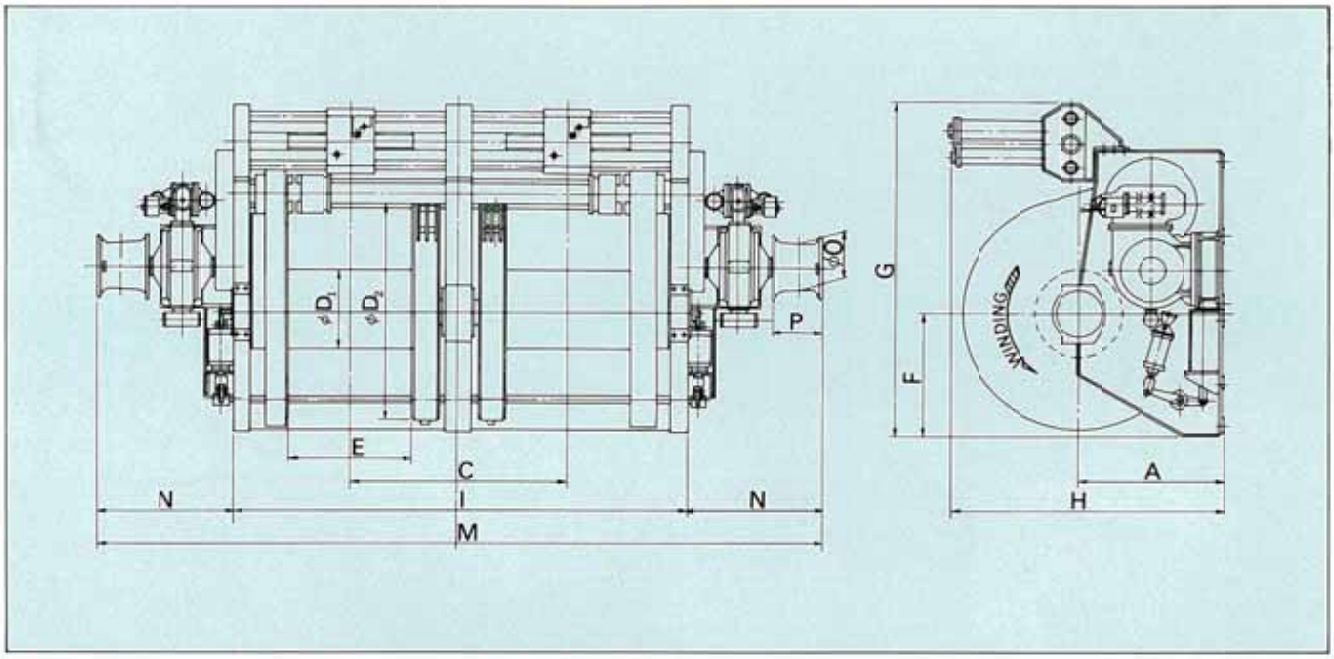

DETAILED SPECIFICATION LIST

Model	Pull-capacity			Max. Pay-out speed at full load (m/min)	Brake capa. (ton)	Stowing-capa. (steel wire rope) (mm)x(m)	Type of hyd. motor & control valve	Type of hyd. pump	Required ele. motor output (kW)	Weight (ton)
	Full-load (ton)x(m/min)	Half-load (ton)x(m/min)	Light-load (ton)x(m/min)							
TDS-60H	60x10	30x15	12x30	33	120	φ52x1000 With 10 layers	2-MA8M/E12	2-FG16	87x2	30.5
TDS-80H	80x8	40x12	16x24	26.5	160	φ56x1000 With 10 layers			94x2	35.4
TDS-100H	100x6.5	50x9.8	20x19.5	21.5	200	φ64x1100 With 10 layers			95x2	42.0

3. Control Equipment

- Control system is a Hydraulic Servo & Pneumatic Remote Control System.
- Each control console is equipped with an operation pilot lamp for each power unit, claw clutch etc., and also with a pressure gauge for air pressure regulation.
- All power units are machine-side controlled.
- Each brake system is equipped on the machine side with a hand-operated brake for emergency use.

ITEM / TYPE	TOWING/ANCHOR HANDLING WINCH		TOWING WINCH
CONTROL CONSOLE TYPE	DRIP PROOF WITHOUT COVER		DRIP PROOF WITHOUT COVER
	(CONTROL HOUSE)	(WHEEL HOUSE)	CONTROL HOUSE OR WHEEL HOUSE
HEAVE/PAY OUT OF TOWING DRUM	○	—	○
HEAVE/PAY OUT OF ANCHOR DRUM	○	○	—
BRAKE FOR TOWING DRUM	○	—	○
BRAKE FOR ANCHOR DRUM	○	○	—
CLAW CLUTCH FOR TOWING DRUM	○	—	○
CLAW CLUTCH FOR ANCHOR DRUM	○	○	—
QUICK RELEASE FOR BRAKE OF TOWING DRUM	—	○	○
ALARM DEVICE OF BRAKE "SLIP" FOR TOWING DRUM	○	○	○
REVOLUTION COUNTER OF EACH WIRE DRUM	"OPTIONAL"	"OPTIONAL"	"OPTIONAL"
WIRE LENGTH COUNTER OF EACH WIRE DRUM			
WIRE TENSION OF EACH WIRE DRUM			
AUTO TENSION EQUIPMENT			
"START-STOP" OF EACH POWER UNIT			

4. Winding Speed Table

- The winding speed indicated below is the speed at rated loading for the first layer of the drum wire.
- The speed at light load is 3 times that at rated loading.

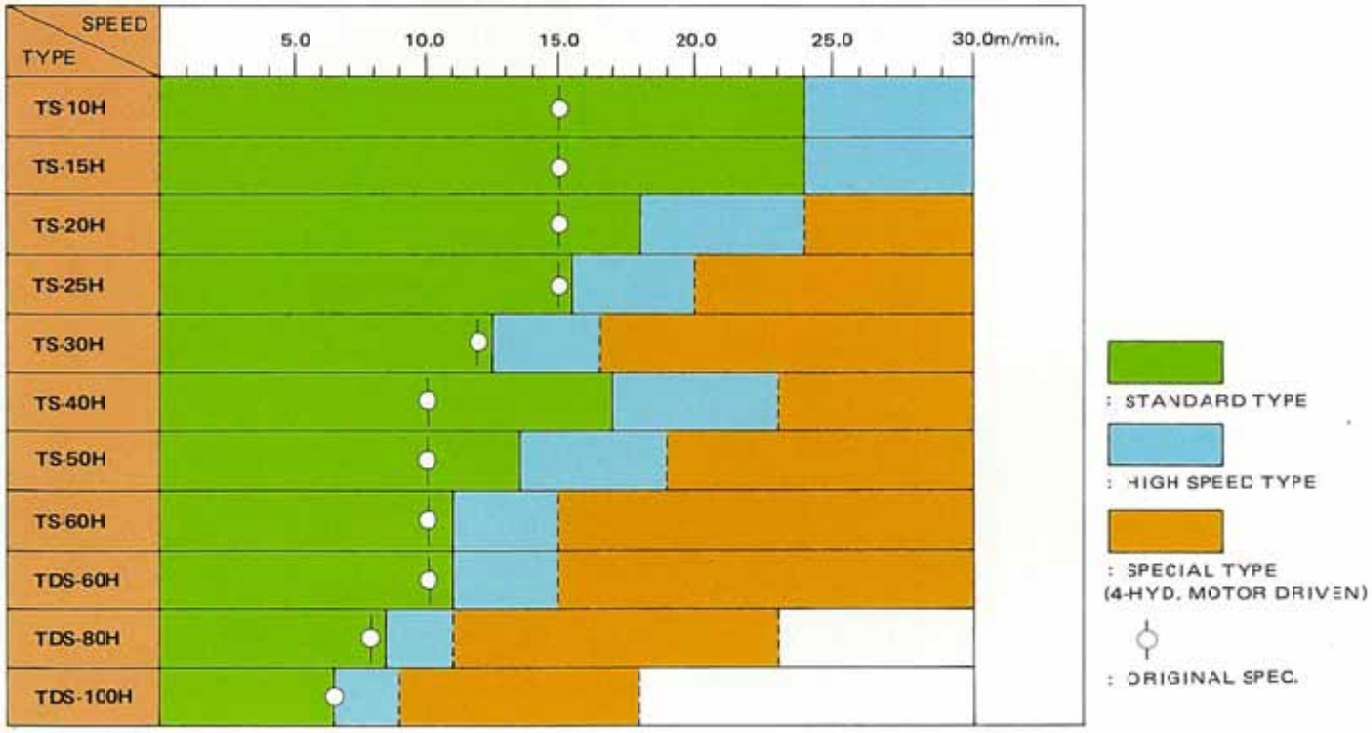

II. HYDRAULIC WINDLASS AND CAPSTAN

This machinery has been developed as a series of small-sized hydraulic deck machinery for tug boats, supply vessels and all kinds of operations vessels.
The series utilizes the FUKUSHIMA hydraulic system, is simple in construction and displays extremely high performance ratings.
It has been designed so that its excellent qualities are given full play on small-sized vessels in particular.

1 HYDRAULIC WINDLASS

"F" TYPE

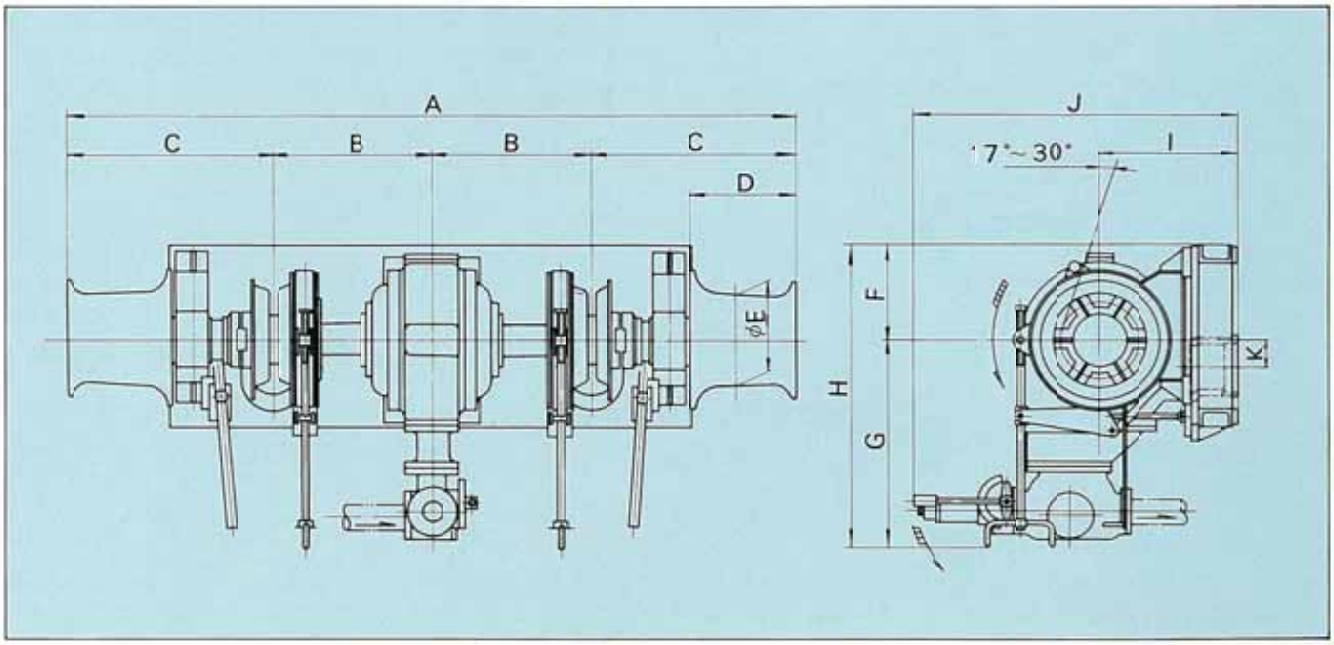

DETAILED SPECIFICATION LIST

Chain dia. (mm)	Model	Chain-wheel			Warping end			Type of hyd. motor & control valve	Type of hyd. pump	Required els. motor output (kw)	Weight (ton)
		Load (ton)	Speed (m/min)	Brake capa. (ton)	Load (ton)	Speed (m/min)	Drum-size (mm)				
20.5	F2024II-S	2.5	12.0	3.6	1	19.0	φ400×450	MA4/E2	FG3	13.5	2.20
22		3.0		4.1		17.8				16	
24		3.5		4.8		16.3				20	
26	F2630II-S	4.0	12.0	5.7	2	15.1	φ400×450	MA7M/E2	FG5	18	3.00
28		4.5		6.5		14.0				20	
30		5.5		7.5		13.1			FG3	24	
32	F3236II-S	6.0	12.0	8.5	2.5	13.8	φ450×500	FMA10/E2	FG5	25	3.65
34		7.0		9.5		13.0				28	
36		7.5		10.7		12.0				32	

DIMENSION LIST

MODEL	A	B	C	D	E	F	G	H	I	J	K
F2024 II-S	2900	600	850	460	400	380	612.5	992.5	450	1124	70
F2630 II-S	3110	650	905			465	852.5	1317.5	550	1429	80
F3236 II-S	3350	700	975	510	450	465	852.5	1317.5	650	1529	110

2 HYDRAULIC CAPSTAN

"HCA"TYPE

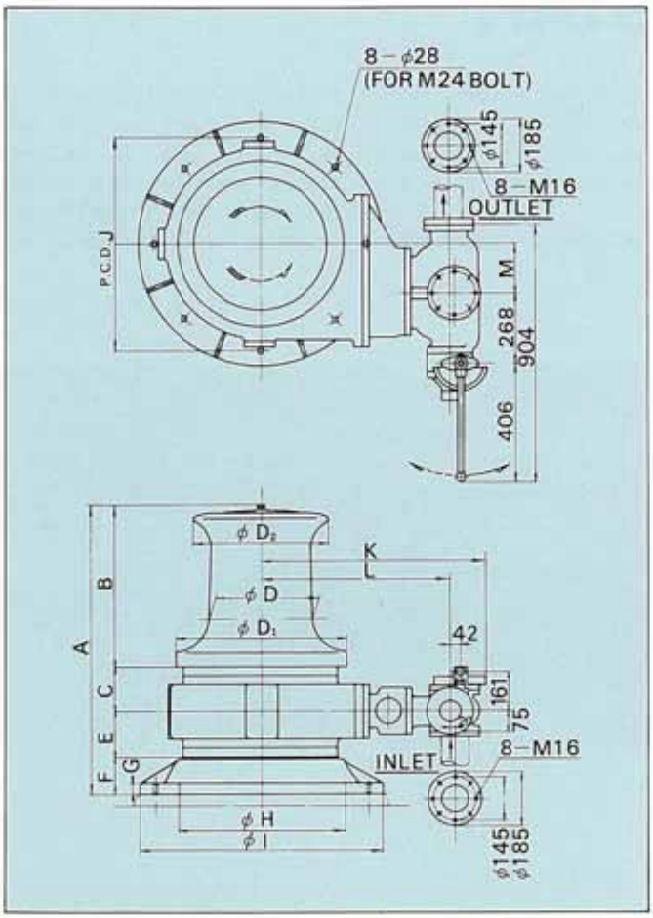

DETAILED SPECIFICATION LIST

Model	Pull-capacity		Warping-end drum-size (mm.)	Type of hyd. motor & control valve	Type of hyd. pump	Required ele. motor output (kw)	Weight (ton)
	Load (ton)	Speed (m/min.)					
HCA5-3	3.0	10	φ450x550	CA5/E2	FG3	13	1.2
		15				16	
		20				20	
		25			FG5	24.5	
HCA8-5	5.0	10	φ500x650	CA8/E2	FG3	17.5	2.0
		15			FG5	25	
		20				32	
		25			FG170	34	
HCA10-7	7.0	10	φ500x650	CA10/E2	FG3	23.5	2.2
		15			FG5	33	
		20			FG170	38	
		25			FG16	47	

DIMENSION LIST

Model	A	B	C	D	D1	D2	E	F	G	H	I	J	K	L	M
HCA5-3	1020	550	155	450	650	500	165	150	28	620	900	800	837	580	235
HCA8-5	1182	650	185	500	800	650	197	150	33	710	1000	900	937	780	205
HCA10-7	1235	650	215	500	800	650	220	150	35	710	1000	900	937	780	190

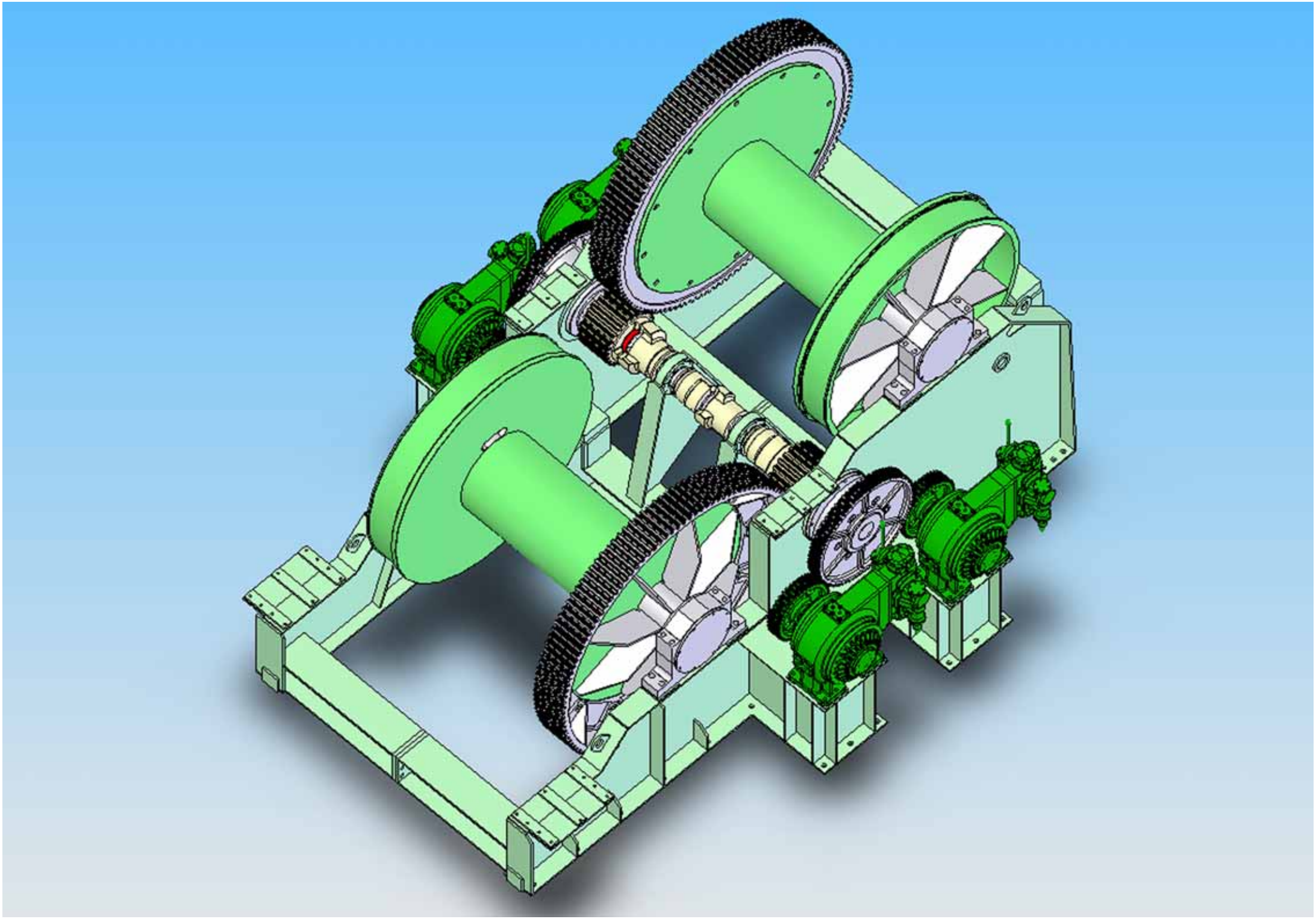

SERVICE STATION

- AUSTRALIA
  T.S.F. Engineering
  TEL +61-2-997-2200
  FAX +61-2-997-4077
- GEARMANY
  Rolls-Royce Marine Deutschland GMBH
  TEL +49-40-7809-1910
  FAX +49-40-7809-1919
- THE NETHERLANDS
  Rolls-Royce Marine Rekab B.V.
  TEL +31-50-54-25-425
  FAX +31-50-54-25-588
- SINGAPORE
  Fuji Horiguchi Engineering Pte. Ltd.
  TEL +65-6863-6368
  FAX +65-6863-8310
- UNITED ARAB EMIRATES
  Middle East Fuji LLC, Dubai
  TEL +971-4-3474444
  FAX +971-4-3472771
- NORWAY
  Rolls-Royce Marine AS Dep.
  TEL +47-7020-8500
  FAX +47-7020-8600
- U.S.A.
  Rolls-Royce Marine USA Inc.
  TEL +1-504-464-4561
  FAX +1-504-464-4565
- CANADA
  Marine Tech Industries Ltd.
  TEL +1-604-507-0880
  FAX +1-604-507-0881
- JAPAN
  Fukushima Ltd.
  TEL +81-3-5765-8461
  FAX +81-3-5765-8463

HEAD OFFICE & FACTORY	9-80, MIKAWAKITA-MACHI, FUKUSHIMA-CITY, JAPAN TEL 024-534-3146 FAX 024-533-8318
TOKYO OFFICE	SEAVANS NORTH BLDG. 20F, 1-2-1, SHIBAURA, MINATO-KU, TOKYO, JAPAN TEL 03-5765-8461 FAX 03-5765-8464
HOKKAIDO OFFICE	7-3-32, KITA-GOJUICHIJO-HIGASHI, HIGASHI-KU, SAPPORO-CITY, JAPAN TEL 011-722-8311 FAX 011-722-8312
FUKUSHIMA BRANCH	9-80, MIKAWAKITA-MACHI, FUKUSHIMA-CITY, JAPAN TEL 024-534-3150 FAX 024-534-6986
YOKOHAMA BRANCH	SHUA BLDG. 1F, 1-18-22, CHUO, NISHI-KU, YOKOHAMA-CITY, JAPAN TEL 045-313-5362 FAX 045-313-5362
NAGOYA BRANCH	KOGIN BLDG. 5F, 1-11-18, NISHIKI, NAKA-KU, NAGOYA-CITY, JAPAN TEL 052-201-7180 FAX 052-201-6643
OSAKA OFFICE	MAYPLE COURT EAST BLDG. 1F, 2-36 NISHINOSHO CHO, SUITA-CITY, OSAKA, JAPAN TEL 06-6368-5750 FAX 06-6368-5751
ONOMICHI OFFICE	4836-16, TAKASU-CHO, ONOMICHI-CITY, JAPAN TEL 0848-47-1341 FAX 0848-47-1343
SHIMONOSEKI OFFICE	FUJI BLDG. 1F, 2-13-3, ICHINOMIYA, SHIMONOSEKI-CITY, JAPAN TEL 0832-63-2822 FAX 0832-63-2823

NIPPON KAIJI KYOKAI QUALITY ASSURANCE
REGISTERED FIRM
ISO 14001

NIPPON KAIJI KYOKAI QUALITY ASSURANCE
REGISTERED FIRM
ISO 9001
RvA

FUKUSHIMA LTD.

株式会社 福島製作所

本社・工場	〒960-8054 福島市三河北町9-80	TEL 024（534）3146㈹ FAX 024（533）8318
東京事務所	〒105-6791 東京都港区芝浦1-2-1 シーバンスN館20階	TEL 03（5765）8461㈹ FAX 03（5765）8463
北海道営業所	〒007-0851 札幌市東区北51条東7-3-32	TEL 011（722）8311 FAX 011（722）8312
福島営業所	〒960-8054 福島市三河北町9-80	TEL 024（534）3150 FAX 024（534）6986
横浜事務所	〒220-0051 横浜市西区中央1-18-22 秀亜ビル1階	TEL 045（313）5362 FAX 045（313）5362
名古屋事務所	〒460-0003 名古屋市中区錦1-11-18 興銀ビル5階	TEL 052（201）7180 FAX 052（201）6643
大阪営業所	〒564-0071 大阪府吹田市西の庄町2-36 メイプルコートイースト1階	TEL 06（6368）5750 FAX 06（6368）5751
尾道営業所	〒729-0141 尾道市高須町4836-16	TEL 0848（47）1341 FAX 0848（47）1343
下関営業所	〒751-0806 下関市一の宮2-13-3 不二ビル1階	TEL 0832（63）2822 FAX 0832（63）2823