Fukushima

FUKUSHIMA
HYDRAULIC DECK MACHINERY

FUKUSHIMA LTD.

For many years, FUKUSHIMA LTD. has been engaged in the manufacture, sale, research, and development of various kinds of deck machinery for marine and working vessels, and has accumulated wide knowledge and experience in these fields.

In 1961, FUKUSHIMA LTD. entered into a technical co-operation agreement with A/S HYDRAULIK BRATTVAAG of Norway, covering low-pressure-type hydraulic deck machinery.

FUKUSHIMA LTD. has developed these machinery for about 45 years by their accumulated knowledge and experience to meet any requirements of the users at its maximum efficiency and the most reliable quality of its components.

Thousands of vessels have been equipped with our windlasses, mooring winches, cargo-handling winches, etc., and we have received favourable comments from an equal number of satisfied clients.

ADVANTAGES OF FUKUSHIMA HYDRAULIC DECK MACHINERY

A

WORKING EFFICIENCY

High efficiency in cargo-handling and mooring can be obtained by the use of our hydraulic motors, which can be manufactured to produce, at light-line, either 3X or 6X-rated-speed, according to the client's request.

B

ECONOMY OF POWER UNIT

Though powered by only one hydraulic pump, several winches connected in series can be simultaneously operated, if desired. Furthermore, a windlass or a mooring winch can also make use of the common pump, by means of a simple change-over valve. This is highly economical from both the engineering and financial points of view.

C

CONVENIENT SPEED-CONTROL

The speed-range of a particular load is governed automatically by the weight of that particular load. The actual speed of a load within its particular speed-range can be determined by the angle of the control-lever. As the control-lever can be set, steplessly, from zero to maximum, the selected load-speed can be smoothly attained.

D

RAPID ACCELERATION

When the control-lever is set within the working range, load-reaction is immediate, and even maximum speed can be attained within a few seconds.

E

SHOCK-ABSORPTION

Any shock during the operation of the deck machinery is minimized by the cushioning effect of the hydraulic system.

F

OVERLOAD PREVENTION

Even if the winch is overloaded, the overload will not be lifted. This is because the safety-valve fitted to the hydraulic pump causes the oil to bypass the hydraulic motor and lines ; in this way, damage to machinery or hydraulic system is prevented.

G

MINIMUM CAPACITY OF GENERATOR

In case of our electro hydraulic system, the starting current of each electric motor may be minimum because the motor is started only at no loaded condition, and then the capacity of the generator of electric power of the vessel shall be minimized.

H

MINIMAL NOISE-LEVELS

FUKUSHIMA's hydraulic system is a low-pressure system, so noise is minimized and operational comfort is maximized.

I

EASY INSPECTION & MAINTENANCE

Reliability, long-life, and ease of inspection and maintenance are natural results of the simple and strong construction associated with our low-pressure system.

J

EASE OF OPERATION

Our equipment is so designed, that it can be operated safely and efficiently by even an unskilled workman.

K

PARTS-REPLACEMENT & AFTER-SALES SERVICE

The vital hydraulic parts of FUKUSHIMA's deck machinery are identical to those of our licensor's, so a world-wide network of service-stations as shown on **last page** exists to handle any situation that may arise.

WINDLASS

INDUSTRIAL STANDARDS

FUKUSHIMA's standard types of windlass with mooring winch are designed and manufactured satisfied to the following regulations:

JIS F 6713, ISO 4586: Hydraulic windlass

JIS F 6707, ISO 3730: Mooring winch

SHAPE

We produce nine basic shapes of independent type (K type) windlass as listed in the following page (SHAPE-A, B, C, D, E, F, G, H, I). And, we also produce "F" type and "R" type windlass.

CHAIN DIAMETER

Our standard product range is chain diameters from 50 mm to 114 mm. However we can also manufacture the windlass of chain diameters from 19 to 127 mm, upon request.

MODEL No.

The model number is formulated to the following code:

Model No.	1	2	3	—	4
e.g.	K	7073	Ⅲ	—	W510

1 …… Basic type ("K" : independent type, "F" : F type, "R" : R type)

2 …… Chain diameter (e.g. "7073" means 70 mm to 73 mm)

3 …… Kind of chain ("Ⅰ" : Grade 1, "Ⅱ" : Grade 2, "Ⅲ" : Grade 3)

4 …… Kind of mooring winch

STANDARD FEATURES

- Our windlass has a dynamic braking system for anchor lowering by hydraulic motor, and we can obtain about 2 ～ 3.3 times of rated speed.

OPTIONAL FEATURES

- Spring applied, hydraulic release type brake for easy operation
- Remote speed & direction control of rotation for easy operation
- Mechanical chain length indicator
- Stainless steel brake drum surface for good control of brake force
- Semi-enclosed type reduction-gear cover for dust protection
- Totally enclosed, oil bath type reduction-gear for easy maintenance

DECK MACHINERY

WINDLASS

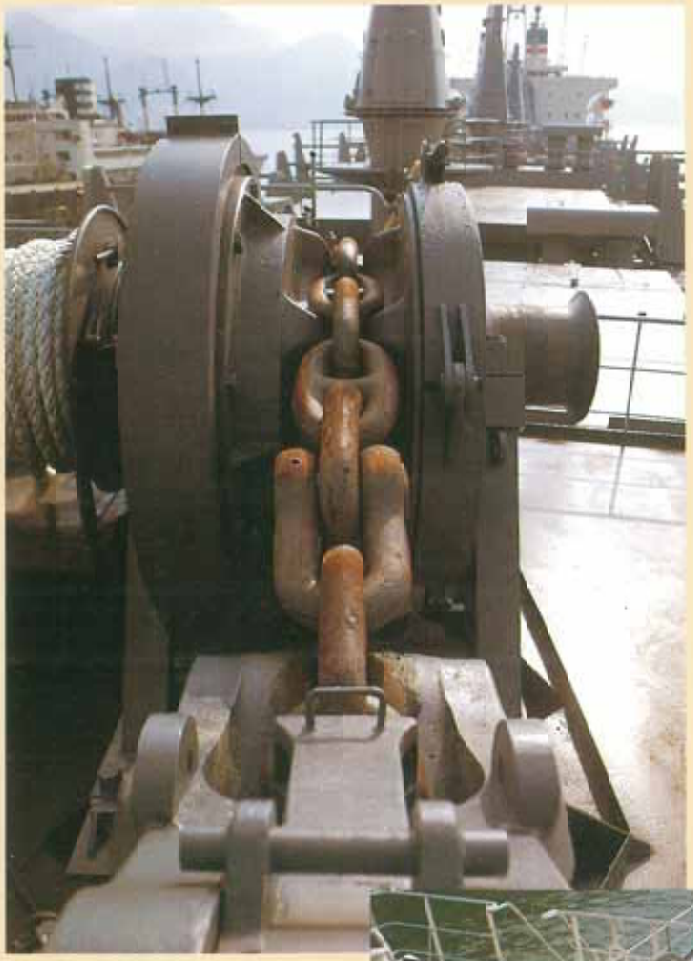

WINDLASS

SHAPE-A

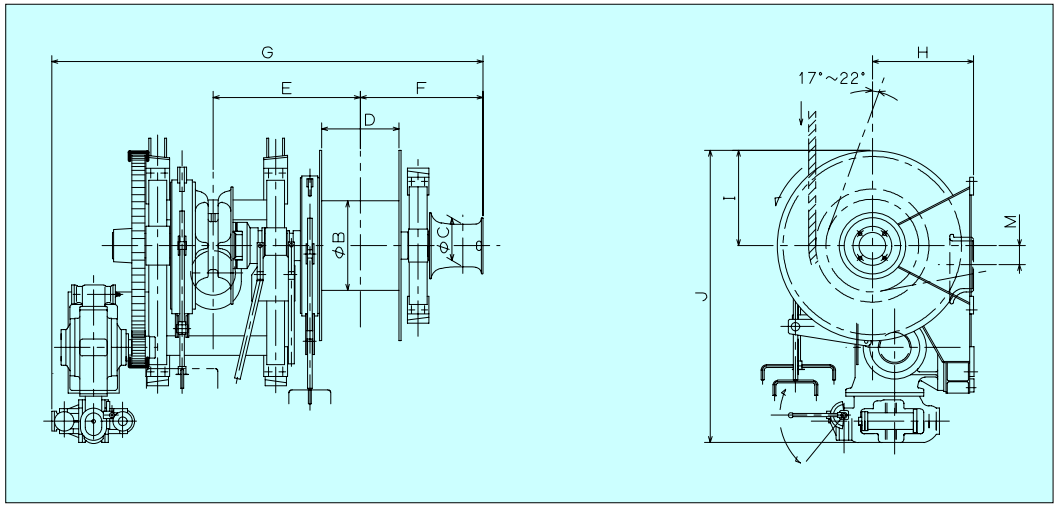

DIMMENSION LIST

Model	Mooring-rope	B	C	D	E	F	G	H	I	J	M
K5054III–W208	Wire	700	355	650	1215	1020	3550	850	735	2295	170
	Hawser			450	1115	920	3350		660	2220	
K5054III–W210	Wire	550	355	800	1290	1095	3700	850	695	2255	170
	Hawser			600	1190	995	3500		660	2220	
K5660III–W308	Wire	950	355	550	1185	980	3530	850	860	2520	200
	Hawser			350	1085	880	3330		780	2435	
K5660III–W310	Wire	750	355	650	1235	1030	3630	850	795	2455	200
	Hawser			450	1135	930	3430		780	2435	
K6266III–W410	Wire	800	355	650	1290	1030	3815	900	905	2810	190
	Hawser			450	1190	930	3615				
K6266III–W412	Wire	800	355	650	1355	1030	3880	900	905	2810	190
	Hawser			450	1255	930	3680				

DETAILED SPECIFICATION LIST

Chain dia. (mm)	Model	Chain wheel Load (kN)	Chain wheel Speed (m/s)	Chain wheel Brake capacity (kN)	Mooring-drum Load (kN)	Mooring-drum Speed (m/s)	Mooring-drum Light-line speed (m/s)	Mooring-drum Drum-size: Wire / Hawser (mm)	Mooring-drum Rope-size : Wire / Hawser (mm)✕(m)	Mooring-drum Brake capacity (kN)	Warping-end Load (kN)	Warping-end Speed (m/s)	Warping-end Drum-size (mm)	Type of hyd. motor & control valve	Type of hyd. pump	Required ele. motor output (kW)	Mass (kg)
50	K5054III–W208	119	0.15	883	80	0.25	0.50	φ700×450 / φ700×650	φ22×200 / φ55×200	220	80	0.12	φ355×450	M2202M / E12	FG16	45	5,600
52		128		951													
54		139		1022													
50	K5054III–W210	119	0.15	883	100	0.25	0.50	φ550×600 / φ550×800	φ25×200 / φ60×200	260	100	0.16	φ355×450	M2202M / E12	FG16	55	5,700
52		128		951													
54		139		1022													
56	K5660III–W308	149	0.15	1094	80	0.25	0.50	φ950×350 / φ950×550	φ22×200 / φ55×200	220	80	0.09	φ355×450	M2703 / E12	FG16	55	6,500
58		160		1169													
60		171		1246													
56	K5660III–W310	149	0.15	1094	100	0.25	0.50	φ750×450 / φ750×650	φ25×200 / φ60×200	260	100	0.11	φ355×450	M2703 / E12	FG16	55	6,400
58		160		1169													
60		171		1246													
62	K6266III–W410	183	0.15	1325	100	0.25	0.50	φ800×450 / φ800×650	φ25×200 / φ60×200	260	100	0.11	φ355×450	M4185 / E12	FG16	65	7,500
64		195		1406													
66		207		1489													
62	K6266III–W412	183	0.15	1325	125	0.25	0.50	φ800×450 / φ800×650	φ26×200 / φ60×200	350	100	0.11	φ355×450	M4185 / E12	FG16	65	7,700
64		195		1406													
66		207		1489													

Note: Rated-capacity is calculated at the first rope layer around the drum.

WINDLASS

SHAPE-B

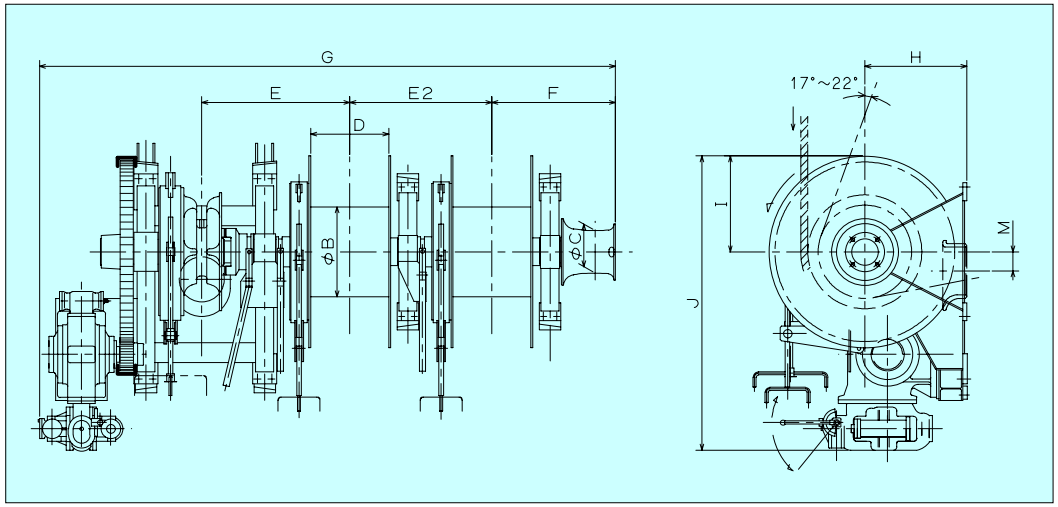

DIMMENSION LIST

Model	Mooring-rope	B	C	D	E	E2	F	G	H	I	J	M
K5054III–W208	Wire	700	355	650	1215	1175	1020	4725	850	735	2295	170
	Hawser			450	1115	975	920	4325		660	2220	
K5054III–W210	Wire	550	355	800	1290	1325	1095	5025	850	695	2255	170
	Hawser			600	1190	1125	995	4625		660	2220	
K5660III–W308	Wire	950	355	550	1185	1085	980	4615	850	860	2520	200
	Hawser			350	1085	895	880	4215		780	2435	
K5660III–W310	Wire	750	355	650	1235	1185	1030	4815	850	795	2455	200
	Hawser			450	1135	985	930	4415		780	2435	
K6266III–W410	Wire	800	355	650	1290	1185	1030	5000	900	905	2810	190
	Hawser			450	1190	985	930	4600				
K6266III–W412	Wire	800	355	650	1355	1250	1030	5130	900	905	2810	190
	Hawser			450	1255	1050	930	4730				

DETAILED SPECIFICATION LIST

Chain dia.	Model	Chain wheel			Mooring-drum						Warping-end			Type of hyd. motor & control valve	Type of hyd. pump	Required ele. motor output	Mass
		Load	Speed	Brake capacity	Load	Speed	Light-line speed	Drum-size: Wire / Hawser	Rope-size : Wire / Hawser	Brake capacity	Load	Speed	Drum-size				
(mm)		(kN)	(m/s)	(kN)	(kN)	(m/s)	(m/s)	(mm)	(mm)✕(m)	(kN)	(kN)	(m/s)	(mm)			(kW)	(kg)
50	K5054III–W208	119	0.15	883	80	0.25	0.50	φ700×450 / φ700×650	φ22×200 / φ55×200	220	80	0.12	φ355×450	M2202M / E12	FG16	45	6,800
52		128		951													
54		139		1022													
50	K5054III–W210	119	0.15	883	100	0.25	0.50	φ550×600 / φ550×800	φ25×200 / φ60×200	260	100	0.16	φ355×450	M2202M / E12	FG16	55	6,700
52		128		951													
54		139		1022													
56	K5660III–W308	149	0.15	1094	80	0.25	0.50	φ950×350 / φ950×550	φ22×200 / φ55×200	220	80	0.09	φ355×450	M2703 / E12	FG16	55	8,200
58		160		1169													
60		171		1246													
56	K5660III–W310	149	0.15	1094	100	0.25	0.50	φ750×450 / φ750×650	φ25×200 / φ60×200	260	100	0.11	φ355×450	M2703 / E12	FG16	55	8,000
58		160		1169													
60		171		1246													
62	K6266III–W410	183	0.15	1325	100	0.25	0.50	φ800×450 / φ800×650	φ25×200 / φ60×200	260	100	0.11	φ355×450	M4185 / E12	FG16	65	8,800
64		195		1406													
66		207		1489													
62	K6266III–W412	183	0.15	1325	125	0.25	0.50	φ800×450 / φ800×650	φ26×200 / φ60×200	350	100	0.11	φ355×450	M4185 / E12	FG16	65	9,000
64		195		1406													
66		207		1489													

Note: Rated-capacity is calculated at the first rope layer around the drum.

WINDLASS

SHAPE-C

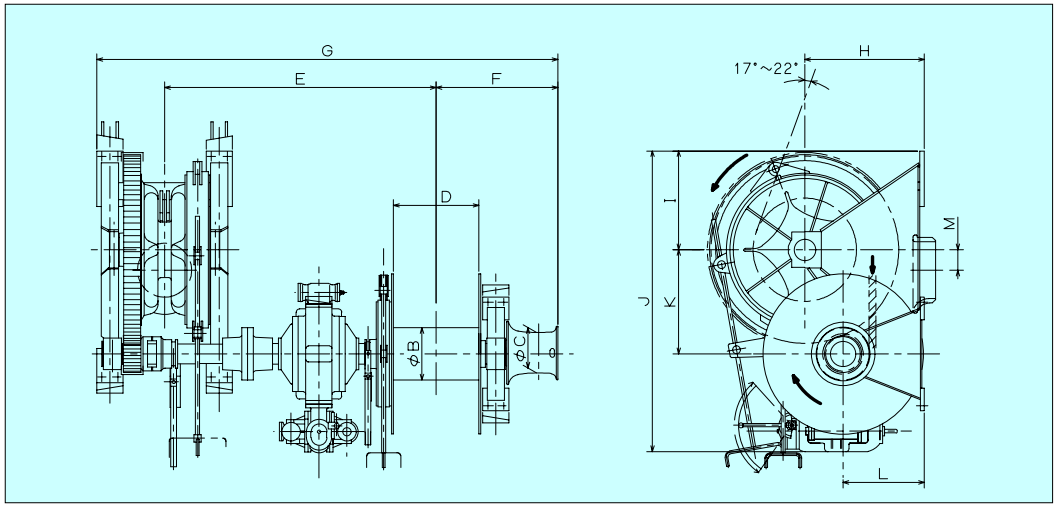

DIMMENSION LIST

Model	Mooring-rope	B	C	D	E	F	G	H	I	J	K	L	M
K6668III–W510	Wire	460	355	700	2350	1045	3965	1000	870	2650	920	715	210
	Hawser			850	2425	1120	4115						
K6668III–W612	Wire	460	355	700	2440	1045	4055	1000	870	2835	965	715	210
	Hawser			850	2515	1120	4205						
K7073III–W510	Wire	460	355	700	2360	1045	4000	1050	870	2650	920	715	200
	Hawser			850	2435	1120	4150						
K7073III–W612	Wire	460	355	700	2450	1045	4090	1050	870	2830	960	715	200
	Hawser			850	2525	1120	4240						

DETAILED SPECIFICATION LIST

Chain dia. (mm)	Model	Chain wheel Load (kN)	Chain wheel Speed (m/s)	Chain wheel Brake capacity (kN)	Mooring-drum Load (kN)	Mooring-drum Speed (m/s)	Mooring-drum Light-line speed (m/s)	Mooring-drum Drum-size: Wire / Hawser (mm)	Mooring-drum Rope-size : Wire / Hawser (mm)×(m)	Mooring-drum Brake capacity (kN)	Warping-end Load (kN)	Warping-end Speed (m/s)	Warping-end Drum-size (mm)	Type of hyd. motor & control valve	Type of hyd. pump	Required ele. motor output (kW)	Mass (kg)
66	K6668III–W510	207	0.15	1489	100	0.25	0.75	φ460×700	φ25×200	260	100	0.19	φ355×450	M5046 / E12	FG16	75	6,800
68		220		1574				φ460×850	φ60×200								
66	K6668III–W612	207	0.15	1489	125	0.25	0.75	φ460×700	φ26×200	350	100	0.19	φ355×450	M6300 / E12	FG16	75	7,200
68		220		1574				φ460×850	φ60×200								
70	K7073III–W510	233	0.15	1661	100	0.25	0.75	φ460×700	φ25×200	260	100	0.19	φ355×450	M5046 / E12	FG16	80	7,000
73		253		1796				φ460×850	φ60×200								
70	K7073III–W612	233	0.15	1661	125	0.25	0.75	φ460×700	φ26×200	350	100	0.19	φ355×450	M6300 / E12	FG16	80	7,400
73		253		1796				φ460×850	φ60×200								

Note: Rated-capacity is calculated at the first rope layer around the drum.

WINDLASS

SHAPE-D

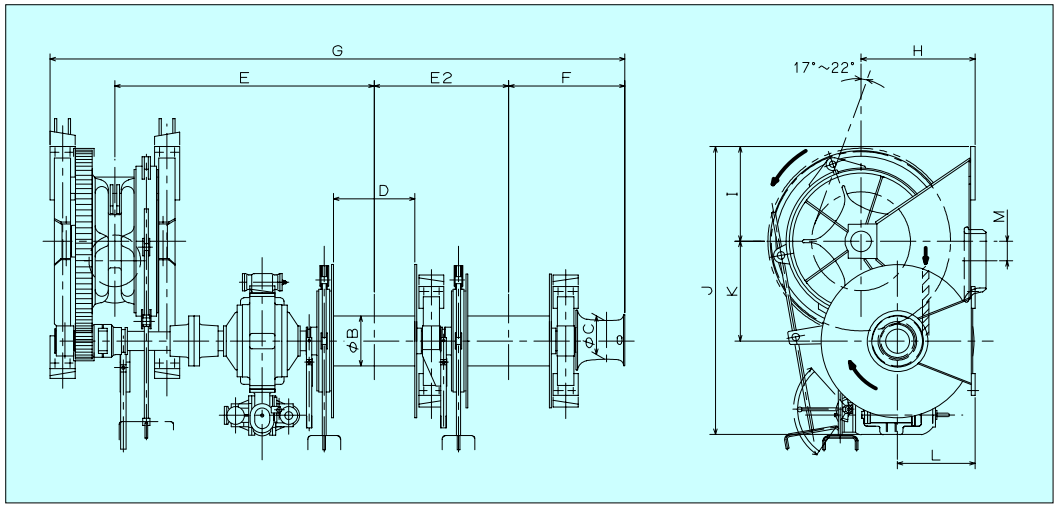

DIMMENSION LIST

Model	Mooring-rope	B	C	D	E	E2	F	G	H	I	J	K	L	M
K6668III–W510	Wire	460	355	700	2350	1185	1045	5150	1000	870	2650	920	715	210
	Hawser			850	2425	1335	1120	5450						
K6668III–W612	Wire	460	355	700	2440	1225	1045	5280	1000	870	2835	965	715	210
	Hawser			850	2515	1375	1120	5580						
K7073III–W510	Wire	460	355	700	2360	1185	1045	5185	1050	870	2650	920	715	200
	Hawser			850	2435	1335	1120	5485						
K7073III–W612	Wire	460	355	700	2450	1225	1045	5315	1050	870	2830	960	715	200
	Hawser			850	2525	1375	1120	5615						

DETAILED SPECIFICATION LIST

Chain dia.	Model	Chain wheel			Mooring-drum						Warping-end			Type of hyd. motor & control valve	Type of hyd. pump	Required ele. motor output	Mass
		Load	Speed	Brake capacity	Load	Speed	Light-line speed	Drum-size: Wire / Hawser	Rope-size : Wire / Hawser	Brake capacity	Load	Speed	Drum-size				
(mm)		(kN)	(m/s)	(kN)	(kN)	(m/s)	(m/s)	(mm)	(mm)✕(m)	(kN)	(kN)	(m/s)	(mm)			(kW)	(kg)
66	K6668III–W510	207	0.15	1489	100	0.25	0.75	ϕ460×700	ϕ25×200	260	100	0.19	ϕ355×450	M5046 / E12	FG16	75	7,700
68		220		1574				ϕ460×850	ϕ60×200								
66	K6668III–W612	207	0.15	1489	125	0.25	0.75	ϕ460×700	ϕ26×200	350	100	0.19	ϕ355×450	M6300 / E12	FG16	75	8,300
68		220		1574				ϕ460×850	ϕ60×200								
70	K7073III–W510	233	0.15	1661	100	0.25	0.75	ϕ460×700	ϕ25×200	260	100	0.19	ϕ355×450	M5046 / E12	FG16	80	7,900
73		253		1796				ϕ460×850	ϕ60×200								
70	K7073III–W612	233	0.15	1661	125	0.25	0.75	ϕ460×700	ϕ26×200	350	100	0.19	ϕ355×450	M6300 / E12	FG16	80	8,500
73		253		1796				ϕ460×850	ϕ60×200								

Note: Rated-capacity is calculated at the first rope layer around the drum.

WINDLASS

SHAPE-E

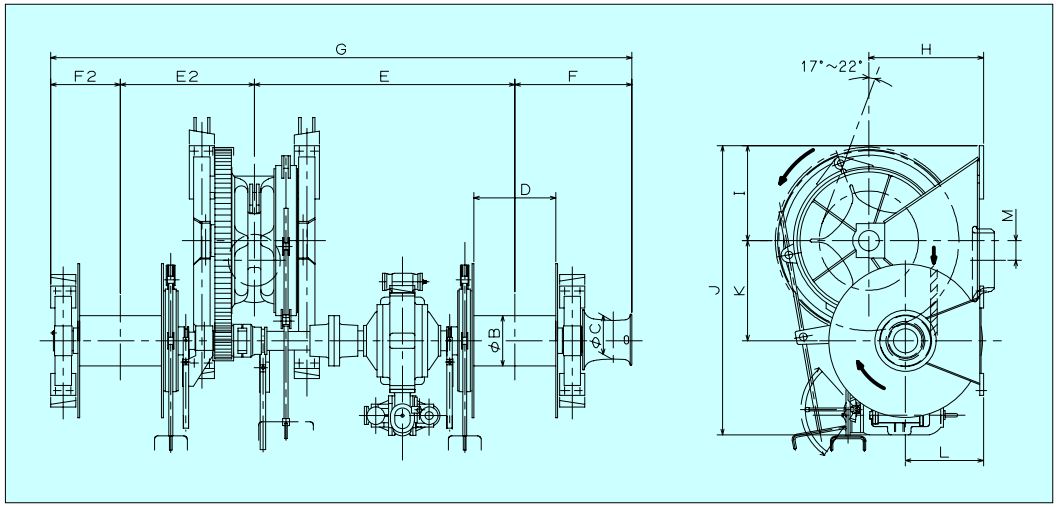

DIMMENSION LIST

Model	Mooring-rope	B	C	D	E	E2	F	F2	G	H	I	J	K	L	M
K6668III–W510	Wire	460	355	700	2350	1135	1045	615	5150	1000	870	2650	920	715	210
	Hawser			850	2425	1210	1120	690	5450						
K6668III–W612	Wire	460	355	700	2440	1175	1045	615	5280	1000	870	2835	965	715	210
	Hawser			850	2515	1250	1120	690	5580						
K7073III–W510	Wire	460	355	700	2360	1150	1045	615	5185	1050	870	2650	920	715	200
	Hawser			850	2435	1225	1120	690	5485						
K7073III–W612	Wire	460	355	700	2450	1190	1045	615	5315	1050	870	2830	960	715	200
	Hawser			850	2525	1265	1120	690	5615						

DETAILED SPECIFICATION LIST

Chain dia.	Model	Chain wheel			Mooring-drum						Warping-end			Type of hyd. motor & control valve	Type of hyd. pump	Required ele. motor output	Mass
		Load	Speed	Brake capacity	Load	Speed	Light-line speed	Drum-size: Wire / Hawser	Rope-size : Wire / Hawser	Brake capacity	Load	Speed	Drum-size				
(mm)		(kN)	(m/s)	(kN)	(kN)	(m/s)	(m/s)	(mm)	(mm)✕(m)	(kN)	(kN)	(m/s)	(mm)			(kW)	(kg)
66	K6668III–W510	207	0.15	1489	100	0.25	0.75	ϕ460×700	ϕ25×200	260	100	0.19	ϕ355×450	M5046 / E12	FG16	75	7,700
68		220		1574				ϕ460×850	ϕ60×200								
66	K6668III–W612	207	0.15	1489	125	0.25	0.75	ϕ460×700	ϕ26×200	350	100	0.19	ϕ355×450	M6300 / E12	FG16	75	8,300
68		220		1574				ϕ460×850	ϕ60×200								
70	K7073III–W510	233	0.15	1661	100	0.25	0.75	ϕ460×700	ϕ25×200	260	100	0.19	ϕ355×450	M5046 / E12	FG16	80	7,900
73		253		1796				ϕ460×850	ϕ60×200								
70	K7073III–W612	233	0.15	1661	125	0.25	0.75	ϕ460×700	ϕ26×200	350	100	0.19	ϕ355×450	M6300 / E12	FG16	80	8,500
73		253		1796				ϕ460×850	ϕ60×200								

Note: Rated-capacity is calculated at the first rope layer around the drum.

WINDLASS

SHAPE-F

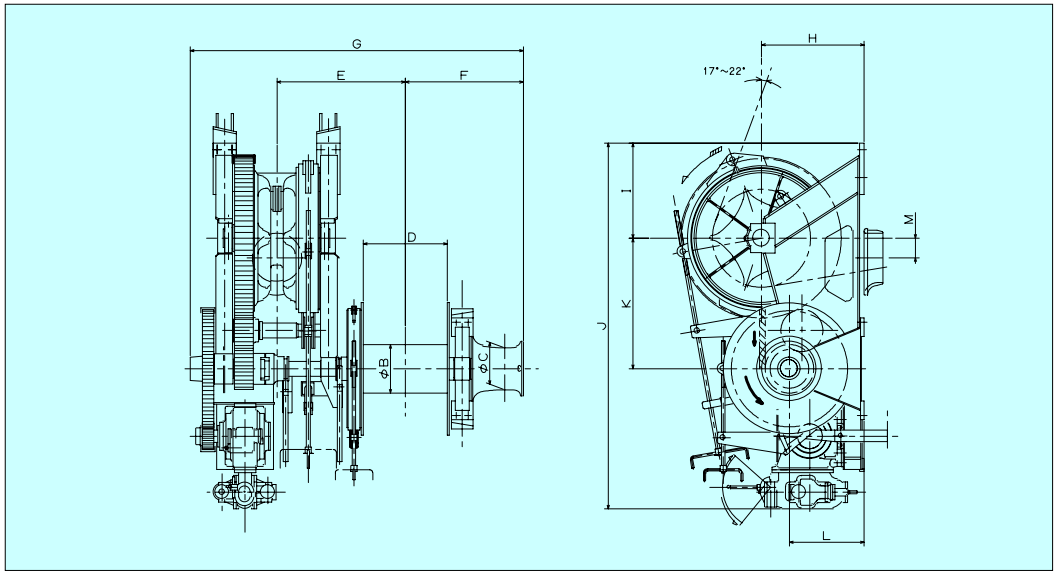

DIMMENSION LIST

Model	Mooring-rope	B	C	D	E	F	G	H	I	J	K	L	M
K7678III–W212	Wire	460	355	700	1240	1045	3150	1000	870	3640	1250	800	240
	Hawser	410		900	1340	1145	3350						
K7678III–W216	Wire	520	355	900	1340	1155	3360	1000	870	3640	1250	800	240
	Hawser	410		1050	1415	1230	3510						
K8184III–W212	Wire	460	355	700	1275	1045	3260	1100	1020	3925	1400	800	230
	Hawser	410		900	1375	1145	3460						
K8184III–W216	Wire	520	355	900	1375	1155	3470	1100	1020	3925	1400	800	230
	Hawser	410		1050	1450	1230	3620						
K8790III–W216	Wire	520	355	900	1400	1155	3495	1100	1020	3975	1400	800	270
	Hawser	410		1050	1475	1230	3645						
K8790III–W320	Wire	580	450	900	1465	1265	3670	1100	1020	4015	1400	800	270
	Hawser	460		1050	1540	1340	3820						
K9295III–W516	Wire	520	355	900	1415	1155	3520	1170	1020	4340	1500	850	270
	Hawser	410		1050	1490	1230	3670						
K9295III–W520	Wire	580	450	900	1480	1265	3695	1170	1020	4335	1500	850	270
	Hawser	460		1050	1555	1340	3845						
97100III–W516	Wire	520	355	900	1435	1155	3540	1270	1100	4495	1600	850	270
	Hawser	410		1050	1510	1230	3690						
K97100III–W520	Wire	580	450	900	1500	1265	3715	1270	1100	4495	1600	850	270
	Hawser	460		1050	1575	1340	3865						

DETAILED SPECIFICATION LIST

Chain dia. (mm)	Model	Chain wheel Load (kN)	Chain wheel Speed (m/s)	Chain wheel Brake capacity (kN)	Mooring-drum Load (kN)	Mooring-drum Speed (m/s)	Mooring-drum Light-line speed (m/s)	Mooring-drum Drum-size: Wire / Hawser (mm)	Mooring-drum Rope-size : Wire / Hawser (mm)✕(m)	Mooring-drum Brake capacity (kN)	Warping-end Load (kN)	Warping-end Speed (m/s)	Warping-end Drum-size (mm)	Type of hyd. motor & control valve	Type of hyd. pump	Required ele. motor output (kW)	Mass (kg)
76	K7678III–W212	274	0.15	1934	120	0.25	0.75	φ460×900	φ26×200	350	100	0.19	φ355×450	M2202M / E12	FG16	85～95	8,000
78		289		2029				φ410×700	φ60×200								
76	K7678III–W216	274	0.15	1934	160	0.25	0.75	φ520×900	φ32×250	470	120	0.17	φ355×450	M2202M / E12	FG16	100	8,300
78		289		2029				φ410×1050	φ65×220								
81	K8184III–W212	312	0.15	2174	120	0.25	0.75	φ460×900	φ26×200	350	100	0.19	φ355×450	M2202M / E12	FG16	110	9,400
84		335		2323				φ410×700	φ60×200								
81	K8184III–W216	312	0.15	2174	160	0.25	0.75	φ520×900	φ32×250	470	120	0.17	φ355×450	M2202M / E12	FG16	110	9,700
84		335		2323				φ410×1050	φ65×220								
87	K8790III–W216	360	0.15	2476	160	0.25	0.75	φ520×900	φ32×250	470	120	0.17	φ355×450	M2202M / E12	FG16	120	11,000
90		385		2632				φ410×1050	φ65×220								
87	K8790III–W320	360	0.15	2476	200	0.25	0.75	φ580×900	φ36×250	590	160	0.19	φ450×560	M2703 / E12	FG16	120	11,500
90		385		2632				φ460×1050	φ75×220								
92	K9295III–W516	402	0.15	2738	160	0.25	0.75	φ520×900	φ32×250	470	120	0.17	φ355×450	M5046 / E12	FG16	132	12,500
95		429		2901				φ410×1050	φ65×220								
92	K9295III–W520	402	0.15	2738	200	0.25	0.75	φ580×900	φ36×250	590	160	0.19	φ450×560	M5046 / E12	FG16	132	12,900
95		429		2901				φ460×1050	φ75×220								
97	K97100III–W516	447	0.15	3011	160	0.25	0.75	φ520×900	φ32×250	470	120	0.17	φ355×450	M5046 / E12	FG18 or FG19	140～145	13,200
100		475		3179				φ410×1050	φ65×220								
97	K97100III–W520	447	0.15	3011	200	0.25	0.75	φ580×900	φ36×250	590	160	0.19	φ450×560	M5046 / E12		140～150	13,600
100		475		3179				φ460×1050	φ75×220								

Note: Rated-capacity is calculated at the first rope layer around the drum.

WINDLASS

SHAPE-G

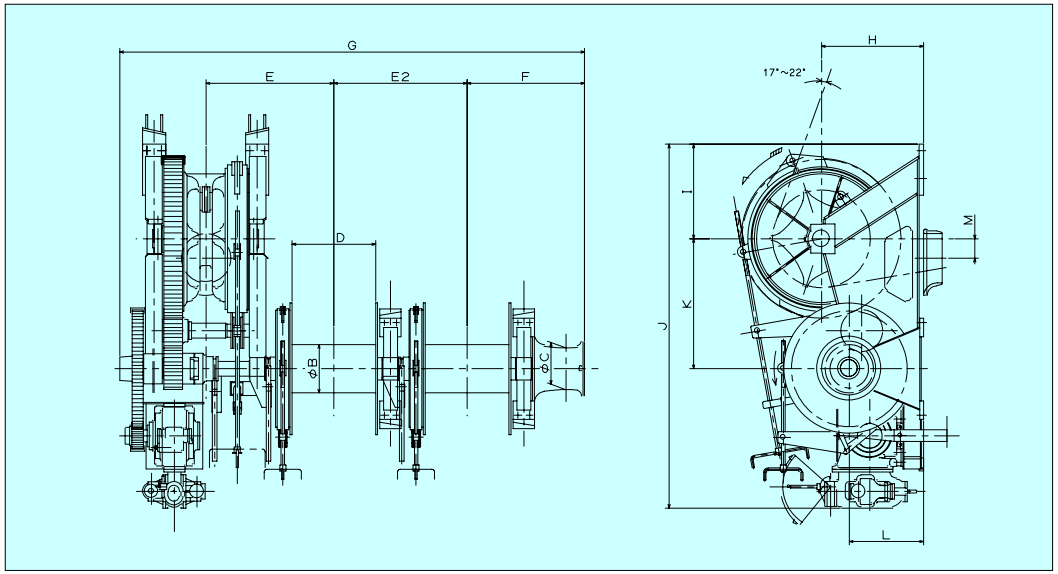

DIMMENSION LIST

Model	Mooring-rope	B	C	D	E	E2	F	G	H	I	J	K	L	M
K7678III–W212	Wire	460	355	700	1240	1225	1045	4375	1000	870	3640	1250	800	240
	Hawser	410		900	1340	1425	1145	4775						
K7678III–W216	Wire	520	355	900	1340	1435	1155	4795	1000	870	3640	1250	800	240
	Hawser	410		1050	1415	1585	1230	5095						
K8184III–W212	Wire	460	355	700	1275	1225	1045	4485	1100	1020	3925	1400	800	230
	Hawser	410		900	1375	1425	1145	4885						
K8184III–W216	Wire	520	355	900	1375	1435	1155	4905	1100	1020	3925	1400	800	230
	Hawser	410		1050	1450	1585	1230	5205						
K8790III–W216	Wire	520	355	900	1400	1435	1155	4930	1100	1020	3975	1400	800	270
	Hawser	410		1050	1475	1585	1230	5230						
K8790III–W320	Wire	580	450	900	1465	1500	1265	5170	1100	1020	4015	1400	800	270
	Hawser	460		1050	1540	1650	1340	5470						
K9295III–W516	Wire	520	355	900	1415	1435	1155	4955	1170	1020	4340	1500	850	270
	Hawser	410		1050	1490	1585	1230	5255						
K9295III–W520	Wire	580	450	900	1480	1500	1265	5195	1170	1020	4335	1500	850	270
	Hawser	460		1050	1555	1650	1340	5495						
97100III–W516	Wire	520	355	900	1430	1435	1155	4970	1270	1100	4495	1600	850	270
	Hawser	410		1050	1505	1585	1230	5270						
K97100III–W520	Wire	580	450	900	1495	1500	1265	5210	1270	1100	4495	1600	850	270
	Hawser	460		1050	1570	1650	1340	5510						

DETAILED SPECIFICATION LIST

Chain dia. (mm)	Model	Chain wheel Load (kN)	Chain wheel Speed (m/s)	Chain wheel Brake capacity (kN)	Mooring-drum Load (kN)	Mooring-drum Speed (m/s)	Mooring-drum Light-line speed (m/s)	Mooring-drum Drum-size: Wire / Hawser (mm)	Mooring-drum Rope-size : Wire / Hawser (mm)×(m)	Mooring-drum Brake capacity (kN)	Warping-end Load (kN)	Warping-end Speed (m/s)	Warping-end Drum-size (mm)	Type of hyd. motor & control valve	Type of hyd. pump	Required ele. motor output (kW)	Mass (kg)
76	K7678III–W212	274	0.15	1934	120	0.25	0.75	φ460×900	φ26×200	350	100	0.19	φ355×450	M2202M / E12	FG16	85～95	9,100
78		289		2029				φ410×700	φ60×200								
76	K7678III–W216	274	0.15	1934	160	0.25	0.75	φ520×900	φ32×250	470	120	0.17	φ355×450	M2202M / E12	FG16	100	9,700
78		289		2029				φ410×1050	φ65×220								
81	K8184III–W212	312	0.15	2174	120	0.25	0.75	φ460×900	φ26×200	350	100	0.19	φ355×450	M2202M / E12	FG16	110	10,500
84		335		2323				φ410×700	φ60×200								
81	K8184III–W216	312	0.15	2174	160	0.25	0.75	φ520×900	φ32×250	470	120	0.17	φ355×450	M2202M / E12	FG16	110	11,100
84		335		2323				φ410×1050	φ65×220								
87	K8790III–W216	360	0.15	2476	160	0.25	0.75	φ520×900	φ32×250	470	120	0.17	φ355×450	M2202M / E12	FG16	120	12,400
90		385		2632				φ410×1050	φ65×220								
87	K8790III–W320	360	0.15	2476	200	0.25	0.75	φ580×900	φ36×250	590	160	0.19	φ450×560	M2703 / E12	FG16	120	13,200
90		385		2632				φ460×1050	φ75×220								
92	K9295III–W516	402	0.15	2738	160	0.25	0.75	φ520×900	φ32×250	470	120	0.17	φ355×450	M5046 / E12	FG16	132	13,900
95		429		2901				φ410×1050	φ65×220								
92	K9295III–W520	402	0.15	2738	200	0.25	0.75	φ580×900	φ36×250	590	160	0.19	φ450×560	M5046 / E12	FG16	132	14,600
95		429		2901				φ460×1050	φ75×220								
97	K97100III–W516	447	0.15	3011	160	0.25	0.75	φ520×900	φ32×250	470	120	0.17	φ355×450	M5046 / E12	FG18 or FG19	140～145	14,600
100		475		3179				φ410×1050	φ65×220								
97	K97100III–W520	447	0.15	3011	200	0.25	0.75	φ580×900	φ36×250	590	160	0.19	φ450×560	M5046 / E12		140～150	15,300
100		475		3179				φ460×1050	φ75×220								

Note: Rated-capacity is calculated at the first rope layer around the drum.

WINDLASS

SHAPE-H

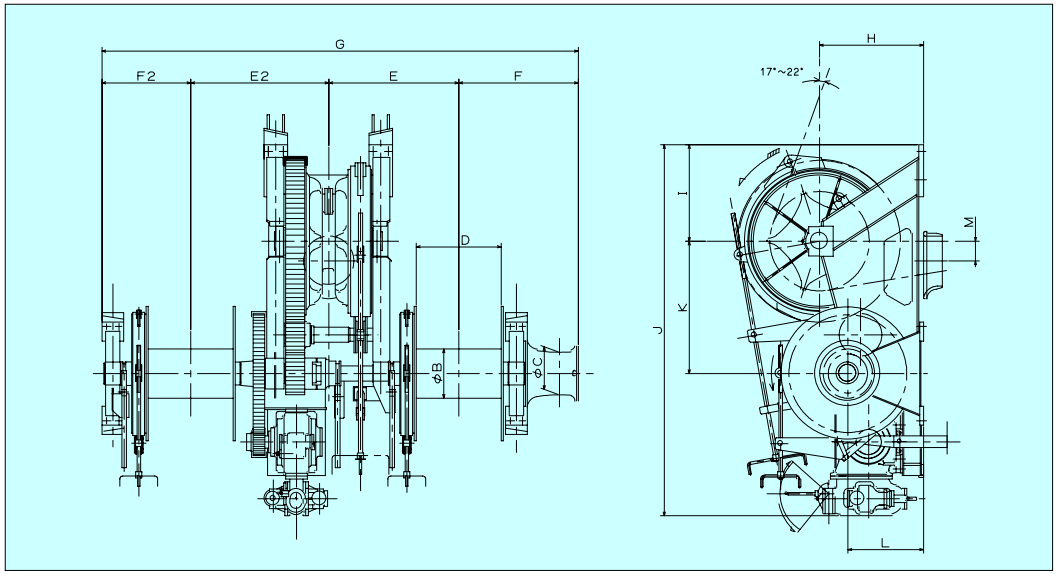

DIMMENSION LIST

Model	Mooring-rope	B	C	D	E	E2	F	F2	G	H	I	J	K	L	M
K7678III–W212	Wire	460	355	700	1240	1275	1045	840	4400	1000	870	3640	1250	800	240
	Hawser	410		900	1340	1375	1145	940	4800						
K7678III–W216	Wire	520	355	900	1340	1385	1155	940	4820	1000	870	3640	1250	800	240
	Hawser	410		1050	1415	1460	1230	1015	5120						
K8184III–W212	Wire	460	355	700	1275	1350	1045	840	4510	1100	1020	3925	1400	800	230
	Hawser	410		900	1375	1450	1145	940	4910						
K8184III–W216	Wire	520	355	900	1375	1460	1155	940	4930	1100	1020	3925	1400	800	230
	Hawser	410		1050	1450	1535	1230	1015	5230						
K8790III–W216	Wire	520	355	900	1400	1470	1155	940	4965	1100	1020	3975	1400	800	270
	Hawser	410		1050	1475	1545	1230	1015	5265						
K8790III–W320	Wire	580	450	900	1465	1470	1265	1005	5205	1100	1020	4015	1400	800	270
	Hawser	460		1050	1540	1545	1340	1080	5505						
K9295III–W516	Wire	520	355	900	1415	1555	1155	940	5065	1170	1020	4340	1500	850	270
	Hawser	410		1050	1490	1630	1230	1015	5365						
K9295III–W520	Wire	580	450	900	1480	1555	1265	1005	5305	1170	1020	4335	1500	850	270
	Hawser	460		1050	1555	1630	1340	1080	5605						
97100III–W516	Wire	520	355	900	1430	1590	1155	940	5115	1270	1100	4495	1600	850	270
	Hawser	410		1050	1505	1665	1230	1015	5415						
K97100III–W520	Wire	580	450	900	1495	1590	1265	1005	5355	1270	1100	4495	1600	850	270
	Hawser	460		1050	1570	1665	1340	1080	5655						

DETAILED SPECIFICATION LIST

Chain dia. (mm)	Model	Chain wheel Load (kN)	Chain wheel Speed (m/s)	Chain wheel Brake capacity (kN)	Mooring-drum Load (kN)	Mooring-drum Speed (m/s)	Mooring-drum Light-line speed (m/s)	Mooring-drum Drum-size: Wire / Hawser (mm)	Mooring-drum Rope-size : Wire / Hawser (mm)×(m)	Mooring-drum Brake capacity (kN)	Warping-end Load (kN)	Warping-end Speed (m/s)	Warping-end Drum-size (mm)	Type of hyd. motor & control valve	Type of hyd. pump	Required ele. motor output (kW)	Mass (kg)
76	K7678III–W212	274	0.15	1934	120	0.25	0.75	φ460×900	φ26×200	350	100	0.19	φ355×450	M2202M / E12	FG16	85～95	9,100
78		289		2029				φ410×700	φ60×200								
76	K7678III–W216	274	0.15	1934	160	0.25	0.75	φ520×900	φ32×250	470	120	0.17	φ355×450	M2202M / E12	FG16	100	9,700
78		289		2029				φ410×1050	φ65×220								
81	K8184III–W212	312	0.15	2174	120	0.25	0.75	φ460×900	φ26×200	350	100	0.19	φ355×450	M2202M / E12	FG16	110	10,500
84		335		2323				φ410×700	φ60×200								
81	K8184III–W216	312	0.15	2174	160	0.25	0.75	φ520×900	φ32×250	470	120	0.17	φ355×450	M2202M / E12	FG16	110	11,100
84		335		2323				φ410×1050	φ65×220								
87	K8790III–W216	360	0.15	2476	160	0.25	0.75	φ520×900	φ32×250	470	120	0.17	φ355×450	M2202M / E12	FG16	120	12,400
90		385		2632				φ410×1050	φ65×220								
87	K8790III–W320	360	0.15	2476	200	0.25	0.75	φ580×900	φ36×250	590	160	0.19	φ450×560	M2703 / E12	FG16	120	13,200
90		385		2632				φ460×1050	φ75×220								
92	K9295III–W516	402	0.15	2738	160	0.25	0.75	φ520×900	φ32×250	470	120	0.17	φ355×450	M5046 / E12	FG16	132	13,900
95		429		2901				φ410×1050	φ65×220								
92	K9295III–W520	402	0.15	2738	200	0.25	0.75	φ580×900	φ36×250	590	160	0.19	φ450×560	M5046 / E12	FG16	132	14,600
95		429		2901				φ460×1050	φ75×220								
97	K97100III–W516	447	0.15	3011	160	0.25	0.75	φ520×900	φ32×250	470	120	0.17	φ355×450	M5046 / E12	FG18 or FG19	140～145	14,600
100		475		3179				φ410×1050	φ65×220								
97	K97100III–W520	447	0.15	3011	200	0.25	0.75	φ580×900	φ36×250	590	160	0.19	φ450×560	M5046 / E12		140～150	15,300
100		475		3179				φ460×1050	φ75×220								

Note: Rated-capacity is calculated at the first rope layer around the drum.

WINDLASS

SHAPE-I

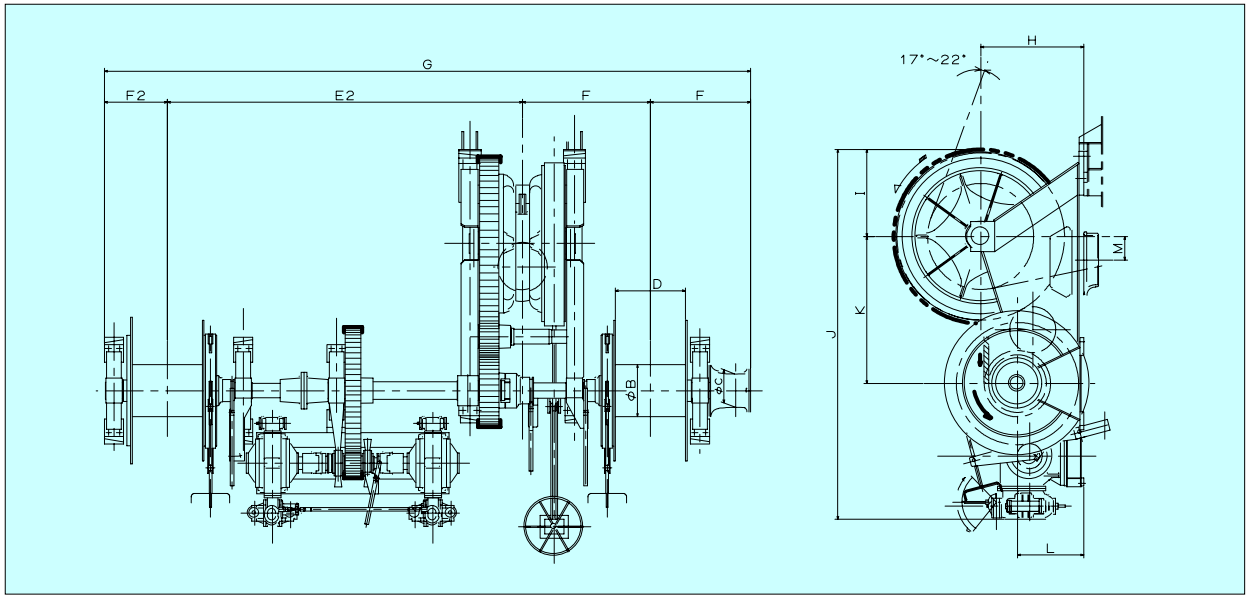

DIMMENSION LIST

Model	Mooring-rope	B	C	D	E	E2	F	F2	G	H	I	J	K	L	M
K111114III–W320	Wire	580	450	900	1595	4380	1265	725	7965	1400	1185	4760	1800	900	290
	Hawser	460		1050	1670	4455	1340	800	8265						
K111114III–W532	Wire	710	450	900	1655	4800	1710	780	8625	1400	1185	5035	2000	900	290
	Hawser	580		1050	1805	4875	1785	855	8925			4955	1900		

DETAILED SPECIFICATION LIST

Chain dia. (mm)	Model	Chain wheel			Mooring-drum						Warping-end			Type of hyd. motor & control valve	Type of hyd. pump	Required ele. motor output (kW)	Mass (kg)
		Load (kN)	Speed (m/s)	Brake capacity (kN)	Load (kN)	Speed (m/s)	Light-line speed (m/s)	Drum-size: Wire / Hawser (mm)	Rope-size : Wire / Hawser (mm)×(m)	Brake capacity (kN)	Load (kN)	Speed (m/s)	Drum-size (mm)				
111	K111114III–W320	585	0.15	3821	200	0.25	0.75	φ580×900	φ36×250	590	160	0.19	φ450×560	M2703 / E12	FG16	110 + 90	23,500
114		617		4003				φ460×	φ75×220								
111	K111114III–W532	585	0.15	3821	315	0.25	0.75	φ710×900	φ44×250	880	160	0.16	φ450×560	M5046 / E12	FG16	132 + 75	28,200
114		617		4003				φ580×	φ95×220								

Note: Rated-capacity is calculated at the first rope layer around the drum.

DECK MACHINERY

MOORING-WINCH

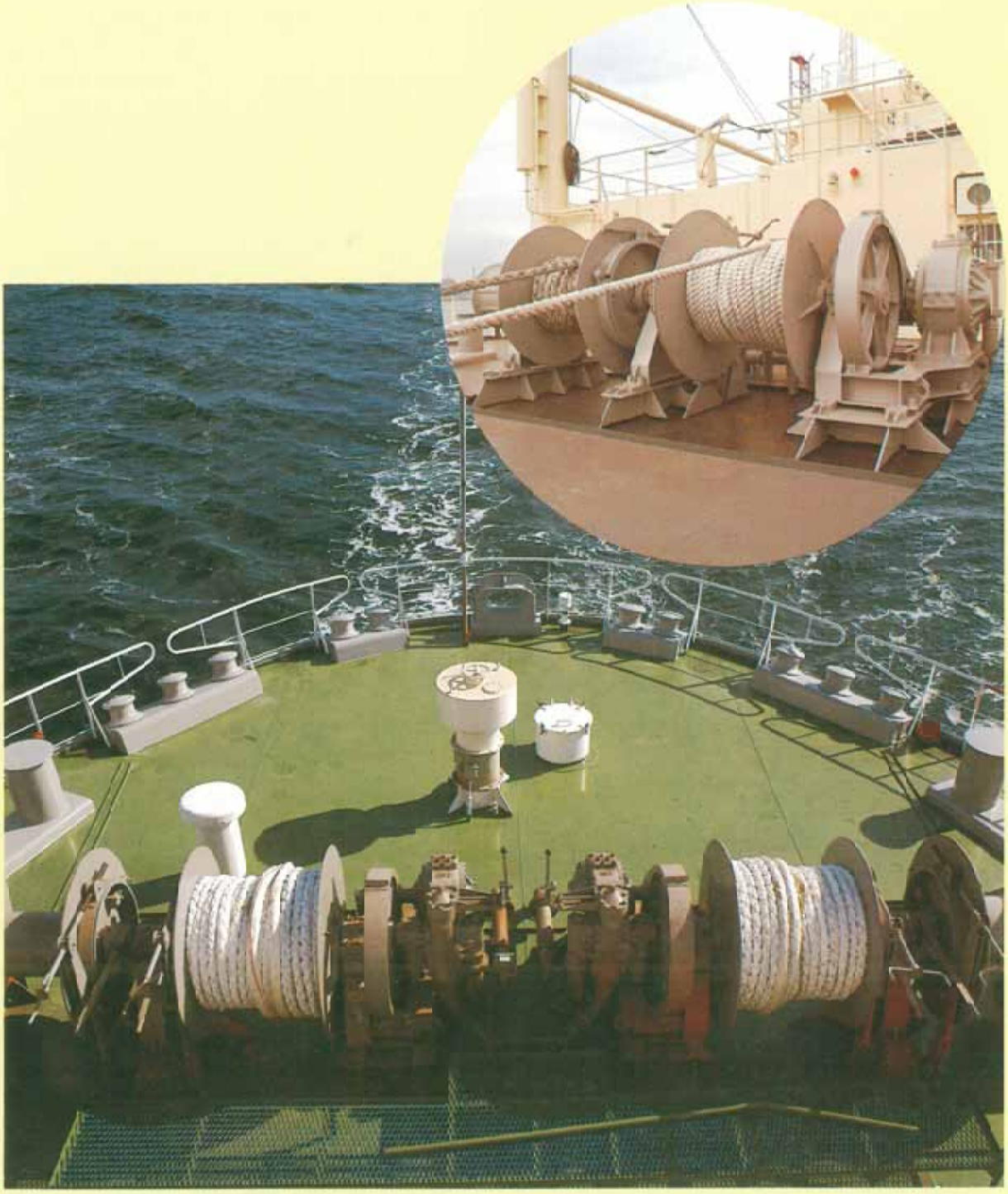

Mooring winch

INDUSTRIAL STANDARDS

FUKUSHIMA's standard types of mooring winch are designed and manufactured satisfied to the following regulations:

JIS F 6707, ISO 3730: Mooring winch

SHAPE

We produce six basic shapes of mooring winch as listed in the following page (SHAPE-A, B, C, D, E, F), distinguished according to rated capacity. And, we also produce other type (e.g. three drum winch, etc.).

RATED CAPACITY

Our standard product range is 50kN, 80kN, 100kN, 125kN, 160kN, 200kN, 250kN and 315kN.

MODEL No.

The model number is formulated to the following code:

Model No.	W	1	2
e.g.	W	5	10

1 …… This number shows the type of hydraulic motor.
"2" shows "M2202M" type hydraulic motor.
"3" : "M2703" type, "4" : "M4185" type, "5" : "M5046" type, "6" : "M6300" type

2 …… This number shows the rated load, in tons.

STANDARD FEATURES

- In case of the rated load is below 125kN, the mooring winch is directly driven by hydraulic motor. This feature omits the lubrication maintenance of gear wheel.

OPTIONAL FEATURES

- Spring applied, manual release or hydraulic release type brake
- Remote speed & direction control of rotation for easy operation
- Stainless steel brake drum surface
- Semi-enclosed type reduction-gear cover for dust protection
- Totally enclosed, oil bath type reduction-gear for easy maintenance
- Auto-tension capability

MOORING WINCH

SHAPE-A

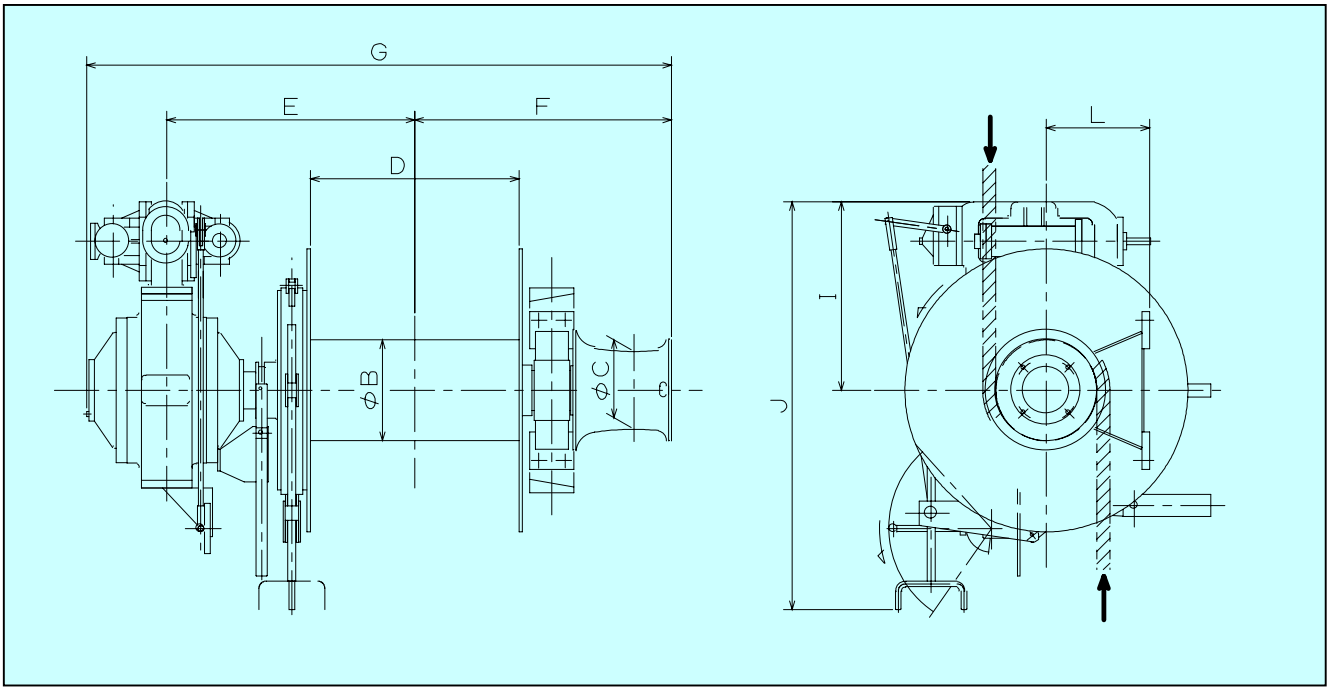

DETAILED SPECIFICATION LIST

Type	Mooring-drum						Warping-end			Type of hyd. motor & control valve	Type of hyd. pump	Required ele. motor output	Mass
	Load (kN)	Speed (m/s)	Light-line speed (m/s)	Drum-size: Wire / Hawser (mm)	Rope-size : Wire / Hawser (mm)×(m)	Brake capacity (kN)	Load (kN)	Speed (m/s)	Drum-size (mm)			(kW)	(kg)
W205	50	0.25	0.75	φ410×500	φ18×180	150	50	0.20	φ355×450	M2202M / E12	FG3	29	2,100
				φ410×850	φ50×200								2,200
W408	80			φ410×650	φ22×200	220	80	0.20		M4185 / E12	FG5	45	2,800
				φ410×900	φ55×200								2,900
W510	100			φ460×700	φ25×200	260	100	0.18		M5046 / E12		50	3,000
				φ460×850	φ60×200								3,100
W612	125			φ460×700	φ26×200	310	100	0.18		M6300 / E12	FG16	60	3,600
				φ460×850	φ60×200								3,700

Note: Rated-capacity is calculated at the first rope layer around the drum.

DIMENSION LIST

Type	Mooring-rope	B	C	D	E	F	G	I	J	L
W205	Wire	410	355	500	790	925	2075	780	1580	335
	Hawser			850	965	1100	2425			
W408	Wire			650	980	1020	2360	860	1710	470
	Hawser			900	1105	1145	2610			
W510	Wire	460		700	1005	1045	2415		1860	
	Hawser			850	1080	1120	2565			
W612	Wire			700	1070	1045	2510	1000	2050	
	Hawser			850	1145	1120	2660			

MOORING WINCH

SHAPE-B

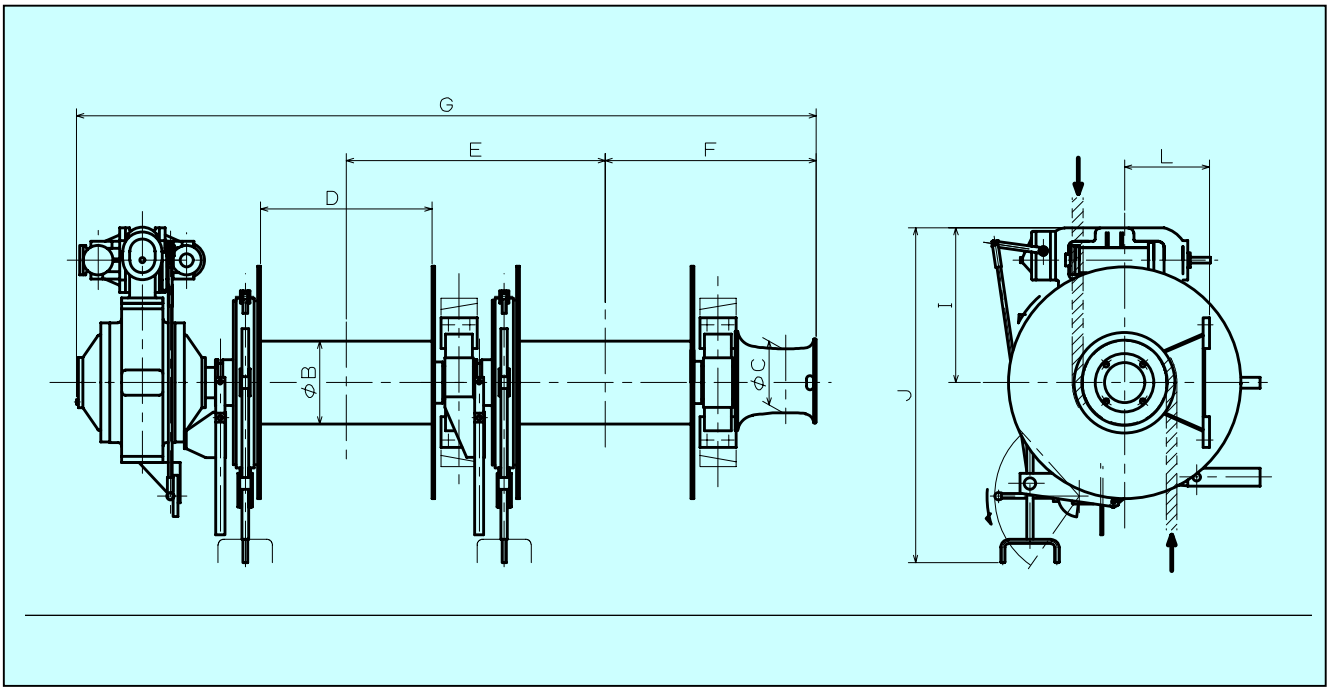

DETAILED SPECIFICATION LIST

Type	Mooring-drum						Warping-end			Type of hyd. motor & control valve	Type of hyd. pump	Required ele. motor output	Mass
	Load (kN)	Speed (m/s)	Light-line speed (m/s)	Drum-size: Wire / Hawser (mm)	Rope-size : Wire / Hawser (mm)×(m)	Brake capacity (kN)	Load (kN)	Speed (m/s)	Drum-size (mm)			(kW)	(kg)
W205	50	0.25	0.75	φ410×500	φ18×180	150	50	0.20	φ355×450	M2202M / E12	FG3	29	2,600
				φ410×850	φ50×200								2,800
W408	80			φ410×650	φ22×200	220	80	0.20		M4185 / E12	FG5	45	3,400
				φ410×900	φ55×200								3,600
W510	100			φ460×700	φ25×200	260	100	0.18		M5046 / E12		50	3,800
				φ460×850	φ60×200								4,000
W612	125			φ460×700	φ26×200	310	100	0.18		M6300 / E12	FG16	60	4,600
				φ460×850	φ60×200								4,900

Note: Rated-capacity is calculated at the first rope layer around the drum.

DIMENSION LIST

Type	Mooring-rope	B	C	D	E	F	G	I	J	L
W205	Wire	410	355	500	920	925	2995	780	1580	335
	Hawser			850	1270	1100	3695			
W408	Wire			650	1135	1020	3495	860	1710	470
	Hawser			900	1385	1145	3995			
W510	Wire	460		700	1185	1045	3600		1860	
	Hawser			850	1335	1120	3900			
W612	Wire			700	1225	1045	3735	1000	2050	
	Hawser			850	1375	1120	4035			

MOORING WINCH

SHAPE-C

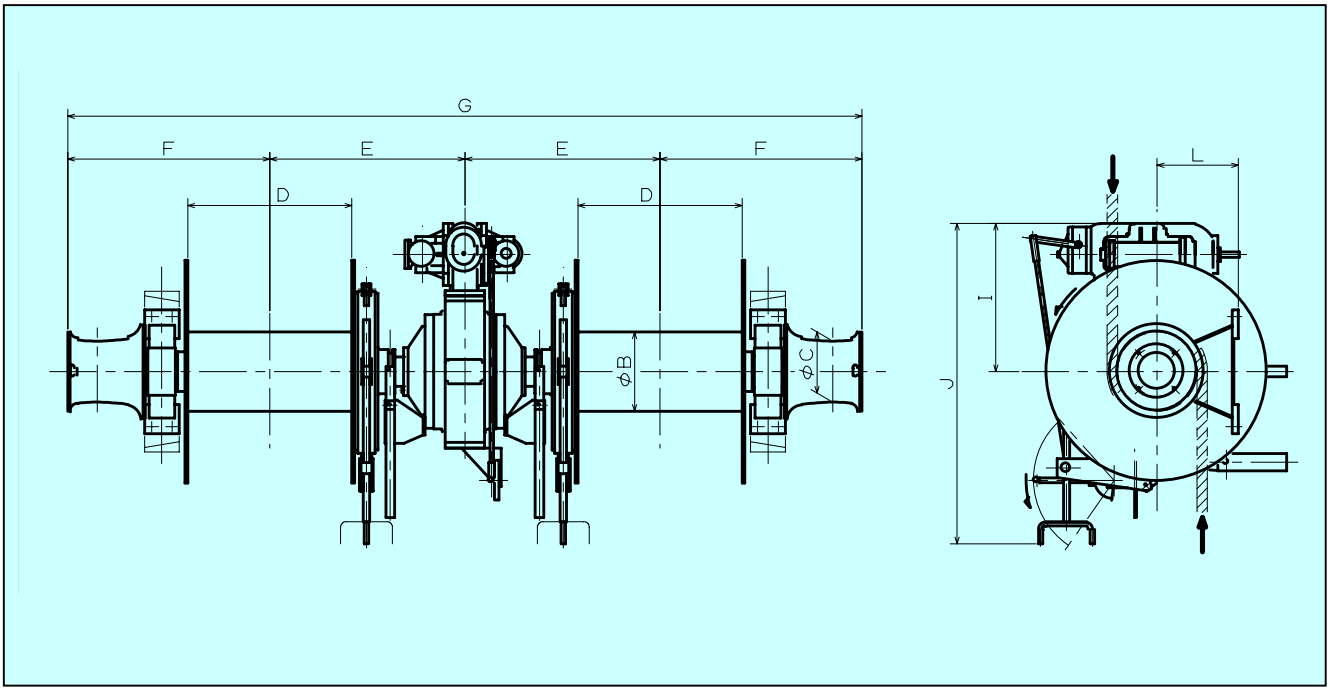

DETAILED SPECIFICATION LIST

Type	Mooring-drum						Warping-end			Type of hyd. motor & control valve	Type of hyd. pump	Required ele. motor output	Mass
	Load (kN)	Speed (m/s)	Light-line speed (m/s)	Drum-size: Wire / Hawser (mm)	Rope-size : Wire / Hawser (mm)×(m)	Brake capacity (kN)	Load (kN)	Speed (m/s)	Drum-size (mm)			(kW)	(kg)
W205	50	0.25	0.75	φ410×500	φ18×180	150	50	0.20	φ355×450	M2202M / E12	FG3	29	2,800
				φ410×850	φ50×200								3,000
W408	80			φ410×650	φ22×200	220	80	0.20		M4185 / E12	FG5	45	3,600
				φ410×900	φ55×200								3,800
W510	100			φ460×700	φ25×200	260	100	0.18		M5046 / E12		50	4,000
				φ460×850	φ60×200								4,200
W612	125			φ460×700	φ26×200	310	100	0.18		M6300 / E12	FG16	60	4,800
				φ460×850	φ60×200								5,100

Note: Rated-capacity is calculated at the first rope layer around the drum.

DIMENSION LIST

Type	Mooring-rope	B	C	D	E	F	G	I	J	L
W205	Wire	410	355	500	1840	925	5530	780	1580	335
	Hawser			850	2540	1100	7280			
W408	Wire			650	2270	1020	6580	860	1710	470
	Hawser			900	2770	1145	7830			
W510	Wire	460		700	2370	1045	6830		1860	
	Hawser			850	2670	1120	7580			
W612	Wire			700	2450	1045	6990	1000	2050	
	Hawser			850	2750	1120	7740			

MOORING WINCH

SHAPE-D

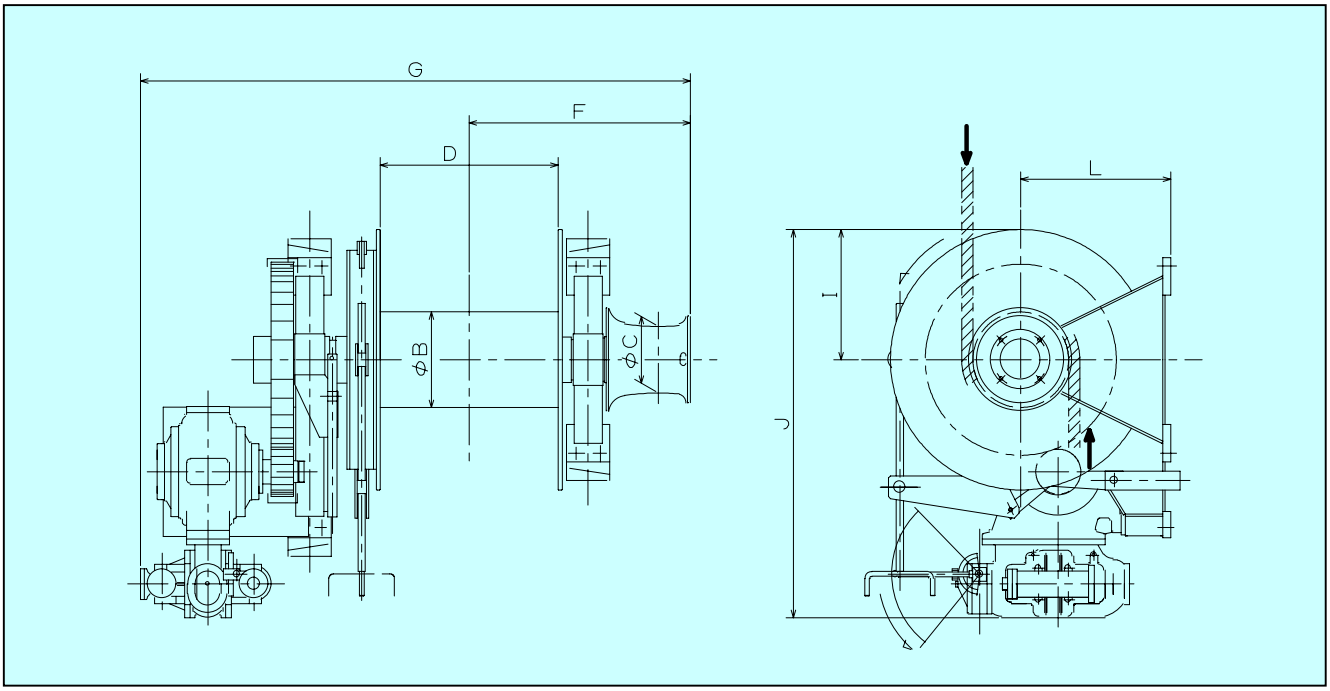

DETAILED SPECIFICATION LIST

Type	Mooring-drum						Warping-end			Type of hyd. motor & control valve	Type of hyd. pump	Required ele. motor output	Mass
	Load (kN)	Speed (m/s)	Light-line speed (m/s)	Drum-size: Wire / Hawser (mm)	Rope-size : Wire / Hawser (mm)×(m)	Brake capacity (kN)	Load (kN)	Speed (m/s)	Drum-size (mm)			(kW)	(kg)
W216	160	0.25	0.75	φ520×900	φ32×250	470	125	0.17	φ355×450	M2202M / E12	FG16	75	3,500
				φ410×1050	φ65×220								3,600
W320	200			φ580×900	φ36×250	590	160	0.19	φ450×560	M2703 / E12		90	4,100
				φ460×1050	φ75×220								4,300
W425	250			φ640×900	φ40×250	730	160	0.18		M4185 / E12		110	5,100
				φ510×1100	φ85×220								5,500
W532	315			φ710×900	φ44×250	880	160	0.16		M5046 / E12		132	6,000
				φ580×1100	φ95×220								6,600

Note: Rated-capacity is calculated at the first rope layer around the drum.

DIMENSION LIST

Type	Mooring-rope	B	C	D	F	G	I	J	L
W216	Wire	520	355	900	1155	2885	635	2035	700
	Hawser	410		1050	1230	3035	660	2040	800
W320	Wire	580	450	900	1265	3045	700	2285	700
	Hawser	460		1050	1340	3195	755	2330	800
W425	Wire	640		900	1295	3220	765	2520	850
	Hawser	510		1100	1395	3420	850	2595	900
W532	Wire	710		900	1335	3370	870	2720	900
	Hawser	580		1100	1435	3570	955	2785	1000

MOORING WINCH

SHAPE-E

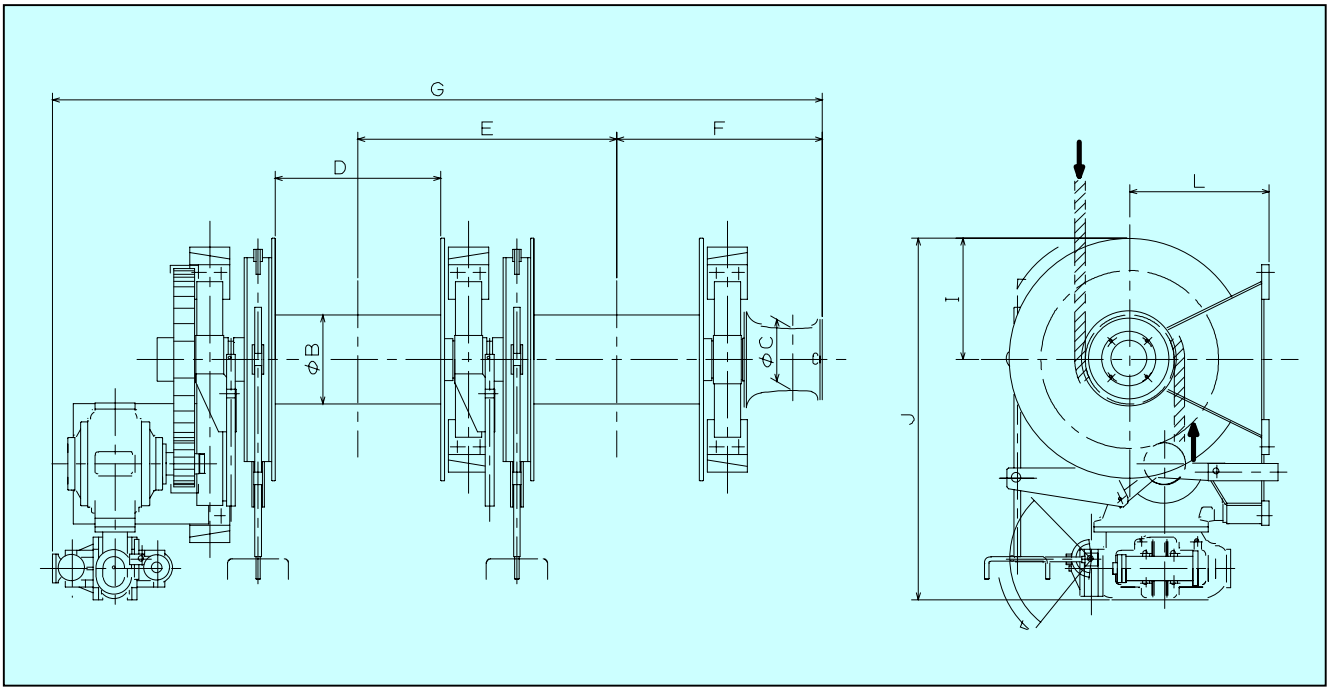

DETAILED SPECIFICATION LIST

Type	Mooring-drum						Warping-end			Type of hyd. motor & control valve	Type of hyd. pump	Required ele. motor output	Mass
	Load (kN)	Speed (m/s)	Light-line speed (m/s)	Drum-size: Wire / Hawser (mm)	Rope-size : Wire / Hawser (mm)×(m)	Brake capacity (kN)	Load (kN)	Speed (m/s)	Drum-size (mm)			(kW)	(kg)
W216	160	0.25	0.75	φ520×900	φ32×250	470	125	0.17	φ355×450	M2202M / E12	FG16	75	4,700
				φ410×1050	φ65×220								5,000
W320	200			φ580×900	φ36×250	590	160	0.19	φ450×560	M2703 / E12		90	5,500
				φ460×1050	φ75×220								6,000
W425	250			φ640×900	φ40×250	730	160	0.18		M4185 / E12		110	6,900
				φ510×1100	φ85×220								7,700
W532	315			φ710×900	φ44×250	880	160	0.16		M5046 / E12		132	8,300
				φ580×1100	φ95×220								9,300

Note: Rated-capacity is calculated at the first rope layer around the drum.

DIMENSION LIST

Type	Mooring-rope	B	C	D	E	F	G	I	J	L
W216	Wire	520	355	900	1435	1155	4320	635	2035	700
	Hawser	410		1050	1585	1230	4620	660	2040	800
W320	Wire	580	450	900	1500	1265	4545	700	2285	700
	Hawser	460		1050	1650	1340	4845	755	2330	800
W425	Wire	640		900	1590	1295	4810	765	2520	850
	Hawser	510		1100	1790	1395	5210	850	2595	900
W532	Wire	710		900	1655	1335	5025	870	2720	900
	Hawser	580		1100	1855	1435	5425	955	2785	1000

MOORING WINCH

SHAPE-F

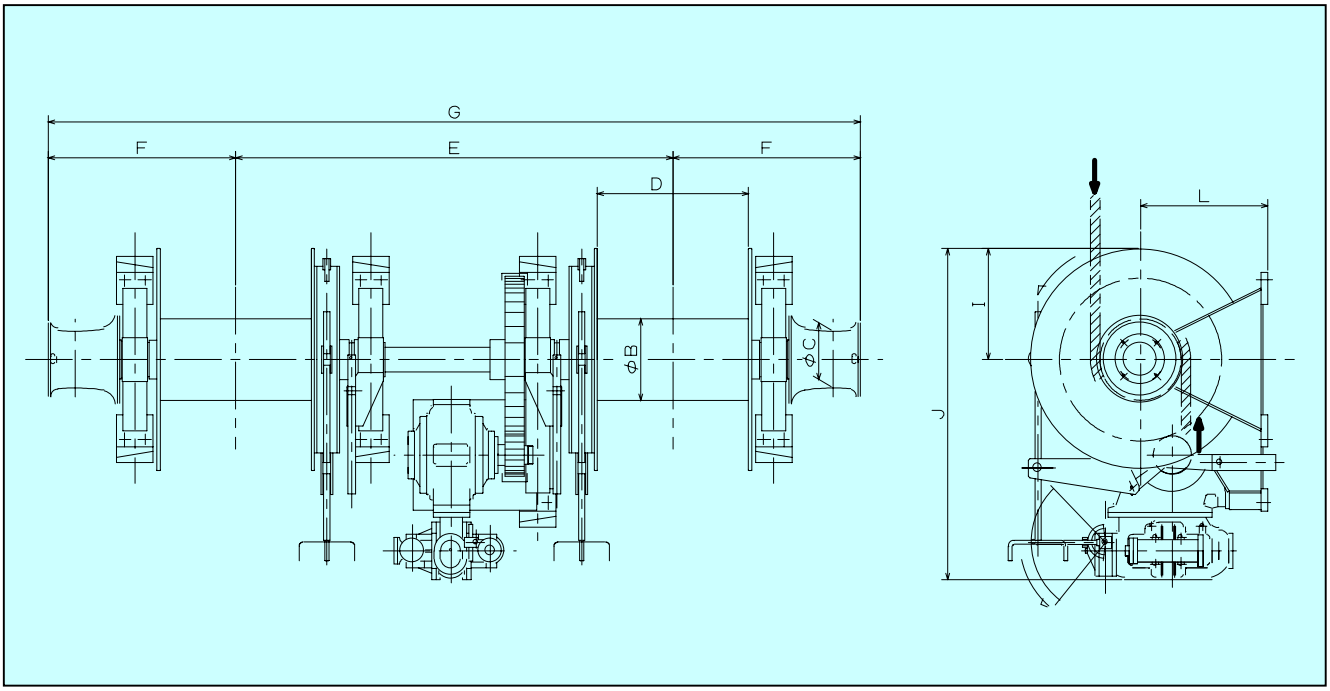

DETAILED SPECIFICATION LIST

Type	Mooring-drum						Warping-end			Type of hyd. motor & control valve	Type of hyd. pump	Required ele. motor output	Mass
	Load (kN)	Speed (m/s)	Light-line speed (m/s)	Drum-size: Wire / Hawser (mm)	Rope-size : Wire / Hawser (mm)×(m)	Brake capacity (kN)	Load (kN)	Speed (m/s)	Drum-size (mm)			(kW)	(kg)
W216	160	0.25	0.75	φ520×900	φ32×250	470	125	0.17	φ355×450	M2202M / E12	FG16	75	5,200
				φ410×1050	φ65×220								5,500
W320	200			φ580×900	φ36×250	590	160	0.19	φ450×560	M2703 / E12		90	6,100
				φ460×1050	φ75×220								6,600
W425	250			φ640×900	φ40×250	730	160	0.18		M4185 / E12		110	7,500
				φ510×1100	φ85×220								8,300
W532	315			φ710×900	φ44×250	880	160	0.16		M5046 / E12		132	9,000
				φ580×1100	φ95×220								10,000

Note: Rated-capacity is calculated at the first rope layer around the drum.

DIMENSION LIST

Type	Mooring-rope	B	C	D	E	F	G	I	J	L
W216	Wire	520	355	900	2670	1155	4980	635	2035	700
	Hawser	410		1050	2820	1230	5280	660	2040	800
W320	Wire	580	450	900	2760	1265	5290	700	2285	700
	Hawser	460		1050	2910	1340	5590	755	2330	800
W425	Wire	640		900	3020	1295	5610	765	2520	850
	Hawser	510		1100	3220	1395	6010	850	2595	900
W532	Wire	710		900	3170	1335	5840	870	2720	900
	Hawser	580		1100	3370	1435	6240	955	2785	1000

POWER-UNIT

Our standard hydraulic pump is driven by an electric motor, through a planetary-type reduction-gear. "Standard electric motor" means standard, horizontal, 4-pole, 440 V., 60 Hz., 3-phase., electric motor for marine use, (totally-enclosed, self-fan-cooling-type).

HYDRAULIC PUMP

Hydraulic pump-type	Oil consumption Q (l/r)	Torque T (kg-cm/kg/cm²)	Input HP (ps/r/kg/cm²)	Speed at max. working-pressure N (r.p.m.)	Max. working-pressure (kg/cm²)	Max. short-time pressure (5 min.) (kg/cm²)
FG3	0.59	95.0	0.00131	750	40	55
FG5	0.85	135.8	0.00189	750	40	55
FG12	3.13	499.0	0.00696	450	40	55
FG16	4.03	644.0	0.00895	465	40	55
FG318/84	4.02	640.0	0.00894	450	40	55
FG18	4.74	754.0	0.01053	450	40	55
FG19	6.35	1012.0	0.01411	450	40	55
G420	8.62	1372.5	0.01915	350	40	55

HYDRAULIC MOTOR

Hydraulic motor-type	Oil consumption Q (l/r)	Torque T (kg-cm/kg/cm²)	Output HP (ps/r/kg/cm²)	R.p.m. at max. working pressure No. of working chambers							Max. working-pressure (kg/cm²)	Max. short-time pressure (5 min.) (kg/cm²)
				3-STEP			2-STEP		1-STEP			
				I	I.II	I.II.III	I.II	I.II.III	I.II.III	I		
M1173	11.73	1867	0.02607	–	–	–	–	–	–	130	40	55
M2202	22.02	3506	0.0489	245	122	81	204	136	136	–	40	55
M2703	27.03	4303	0.06007	185	92	61	150	100	105	–	40	55
M4185	41.85	6656	0.0929	130	65	43	107	71	71	–	40	55
M5046	50.46	8032	0.11215	130	65	43	107	71	71	–	40	55
M6300	62.93	10000	0.139	102	51	34	102	68	70	–	40	55
MG16	4.03	644	0.00895	–	–	–	–	–	–	450	40	55
MG19	6.35	1012	0.01411	–	–	–	–	–	–	400	40	55
DG16	4.03	644	0.00895	–	–	–	–	–	–	400	40	55

Note : I,II & III show the number of hyd. motor chamber.

SERVICE STATION

- AUSTRALIA
  T.S.F. Engineering
  TEL +61-2-997-2200
  FAX +61-2-997-4077
- GEARMANY
  Rolls-Royce Marine Deutschland GMBH
  TEL +49-40-7809-1910
  FAX +49-40-7809-1919
- THE NETHERLANDS
  Rolls-Royce Marine Rekab B.V.
  TEL +31-50-54-25-425
  FAX +31-50-54-25-588
- SINGAPORE
  Fuji Horiguchi Engineering Pte. Ltd.
  TEL +65-6863-6368
  FAX +65-6863-8310
- UNITED ARAB EMIRATES
  Middle East Fuji LLC, Dubai
  TEL +971-4-3474444
  FAX +971-4-3472771
- NORWAY
  Rolls-Royce Marine AS Dep.
  TEL +47-7020-8500
  FAX +47-7020-8600
- U.S.A.
  Rolls-Royce Marine USA Inc.
  TEL +1-504-464-4561
  FAX +1-504-464-4565
- CANADA
  Marine Tech Industries Ltd.
  TEL +1-604-507-0880
  FAX +1-604-507-0881
- JAPAN
  Fukushima Ltd.
  TEL +81-3-5765-8461
  FAX +81-3-5765-8463

HEAD OFFICE & FACTORY	9-80, MIKAWAKITA-MACHI, FUKUSHIMA-CITY, JAPAN TEL 024-534-3146 FAX 024-533-8318
TOKYO OFFICE	SEAVANS NORTH BLDG. 20F, 1-2-1, SHIBAURA, MINATO-KU, TOKYO, JAPAN TEL 03-5765-8461 FAX 03-5765-8464
HOKKAIDO OFFICE	7-3-32, KITA-GOJUICHIJO-HIGASHI, HIGASHI-KU, SAPPORO-CITY, JAPAN TEL 011-722-8311 FAX 011-722-8312
FUKUSHIMA BRANCH	9-80, MIKAWAKITA-MACHI, FUKUSHIMA-CITY, JAPAN TEL 024-534-3150 FAX 024-534-6986
YOKOHAMA BRANCH	SHUA BLDG. 1F, 1-18-22, CHUO, NISHI-KU, YOKOHAMA-CITY, JAPAN TEL 045-313-5362 FAX 045-313-5362
NAGOYA BRANCH	KOGIN BLDG. 5F, 1-11-18, NISHIKI, NAKA-KU, NAGOYA-CITY, JAPAN TEL 052-201-7180 FAX 052-201-6643
OSAKA OFFICE	MAYPLE COURT EAST BLDG. 1F, 2-36 NISHINOSHO CHO, SUITA-CITY, OSAKA, JAPAN TEL 06-6368-5750 FAX 06-6368-5751
ONOMICHI OFFICE	4836-16, TAKASU-CHO, ONOMICHI-CITY, JAPAN TEL 0848-47-1341 FAX 0848-47-1343
SHIMONOSEKI OFFICE	FUJI BLDG. 1F, 2-13-3, ICHINOMIYA, SHIMONOSEKI-CITY, JAPAN TEL 0832-63-2822 FAX 0832-63-2823

NIPPON KAIJI KYOKAI QUALITY ASSURANCE
REGISTERED FIRM
ISO 14001

NIPPON KAIJI KYOKAI QUALITY ASSURANCE
REGISTERED FIRM
ISO 9001
RvA

FujiMetalock Brasil
Equipamentos e peças para indústria
NAVAL e OFFSHORE & serviços pós-venda.
Rua da Gamboa, 281. Santo Cristo
Rio de Janeiro - RJ. BRASIL
CEP: 20220-324 - FONE: (21) 2516-5561
vendas@fujimetalock.com.br
www.fujimetalock.com.br

FUKUSHIMA LTD.

株式会社 福島製作所

本社・工場	〒960-8054 福島市三河北町9-80	TEL 024（534）3146㈹ FAX 024（533）8318
東京事務所	〒105-6791 東京都港区芝浦1-2-1 シーバンスN館20階	TEL 03（5765）8461㈹ FAX 03（5765）8463
北海道営業所	〒007-0851 札幌市東区北51条東7-3-32	TEL 011（722）8311 FAX 011（722）8312
福島営業所	〒960-8054 福島市三河北町9-80	TEL 024（534）3150 FAX 024（534）6986
横浜事務所	〒220-0051 横浜市西区中央1-18-22 秀亜ビル1階	TEL 045（313）5362 FAX 045（313）5362
名古屋事務所	〒460-0003 名古屋市中区錦1-11-18 興銀ビル5階	TEL 052（201）7180 FAX 052（201）6643
大阪営業所	〒564-0071 大阪府吹田市西の庄町2-36 メイプルコートイースト1階	TEL 06（6368）5750 FAX 06（6368）5751
尾道営業所	〒729-0141 尾道市高須町4836-16	TEL 0848（47）1341 FAX 0848（47）1343
下関営業所	〒751-0806 下関市一の宮2-13-3 不二ビル1階	TEL 0832（63）2822 FAX 0832（63）2823